EE533 Lab7 Report

Team 5 Members:
Jeremy Cai (yujiecai@usc.edu, 5988192173)
Prathamesh Hirekodi (hirekodi@usc.edu, 5404695932)
Yanzhe Li (yanzheli@usc.edu, 6884027371)

Date: February 28, 2026

1. Introduction

The goal of this project is to design a custom standalone GPU-like processor together with a supporting software toolchain that translates CUDA-generated PTX into machine code for a custom instruction set. The laboratory specification requires an independent instruction set and instruction memory, a single program counter and instruction stream, support for BFloat16 SIMD-style computation, and a tensor-core-like acceleration path for neural-network-oriented workloads. It also requires a translation flow from kernel.cu to PTX and then to custom GPU opcodes.

In our implementation, we focused on a practical subset of these goals that matches the lab guidance and the resource limitations of the target FPGA platform. Since the lab explicitly states that SIMT is not required, our design does not attempt to reproduce a full NVIDIA-style warp scheduler or exact Tensor Core semantics. Instead, we implemented a simplified custom accelerator architecture with its own ISA, integer and BF16 execution units, a tensor-style computation block, and a Python-based PTX translation flow. The project is therefore best described as a custom PTX-driven GPU-like execution engine for a supported subset of INT16, BF16, and WMMA-style operations.

2. Design Objectives and Scope

The major design objectives of this project are:

1. Define a custom GPU instruction set independent of the ARM processor;
2. Support the core vector operations emphasized by the lab, including:

- vector addition
- vector subtraction
- BF16 multiplication
- BF16 fused multiply-accumulate
- ReLU activation

3. Provide a tensor-oriented execution path inspired by matrix-multiplication accelerators;
4. Build a translation pipeline from CUDA/PTX into custom assembly and machine code;
5. Keep the hardware design compatible with a simplified, non-SIMT, single-instruction-stream execution model.

The project intentionally prioritizes supported-kernel execution over full PTX compatibility. This means our software and hardware are co-designed around a subset of kernels that are representative of the required ANN-oriented workload, rather than aiming for a complete CUDA GPU implementation.

3. Overall Architecture

Our architecture follows a simplified custom-GPU model composed of:

- a custom instruction set defined in gpu_define.v;
- a fetch unit with a single program counter;
- an instruction decoder;
- a lightweight scoreboard for RAW hazard tracking;
- a per-thread SP-style execution core;
- a 4-read/4-write general-purpose register file;
- a predicate register file;
- an INT16 arithmetic path;
- a BF16 arithmetic path;
- a tensor-style acceleration block;
- and a Python-based PTX-to-opcode translation toolchain.

At a high level, the architecture uses one program counter and one instruction stream, consistent with the lab specification. Instructions are fetched from a custom instruction memory, decoded into control signals, and then issued into a simplified execution path. The design is not SIMT; instead, it uses a scalarized custom control model combined with packed-register and tensor-style operations. This is consistent with the lab's instruction that SIMT support is not required.

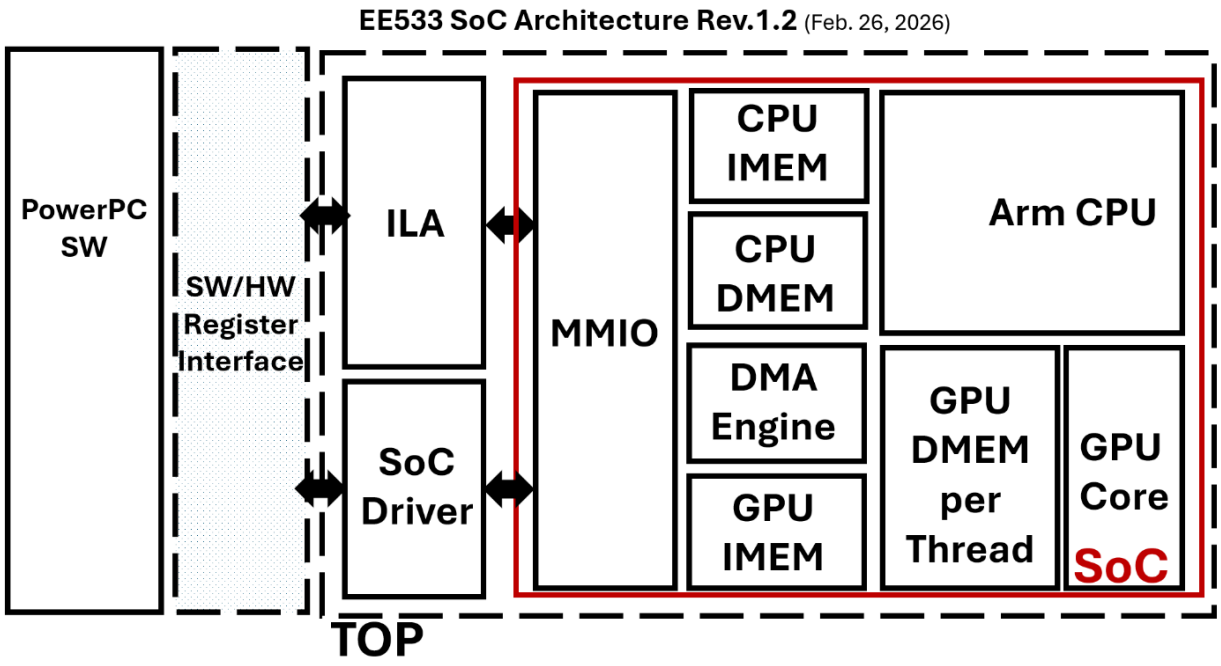

Figure 1. Overall SoC architecture

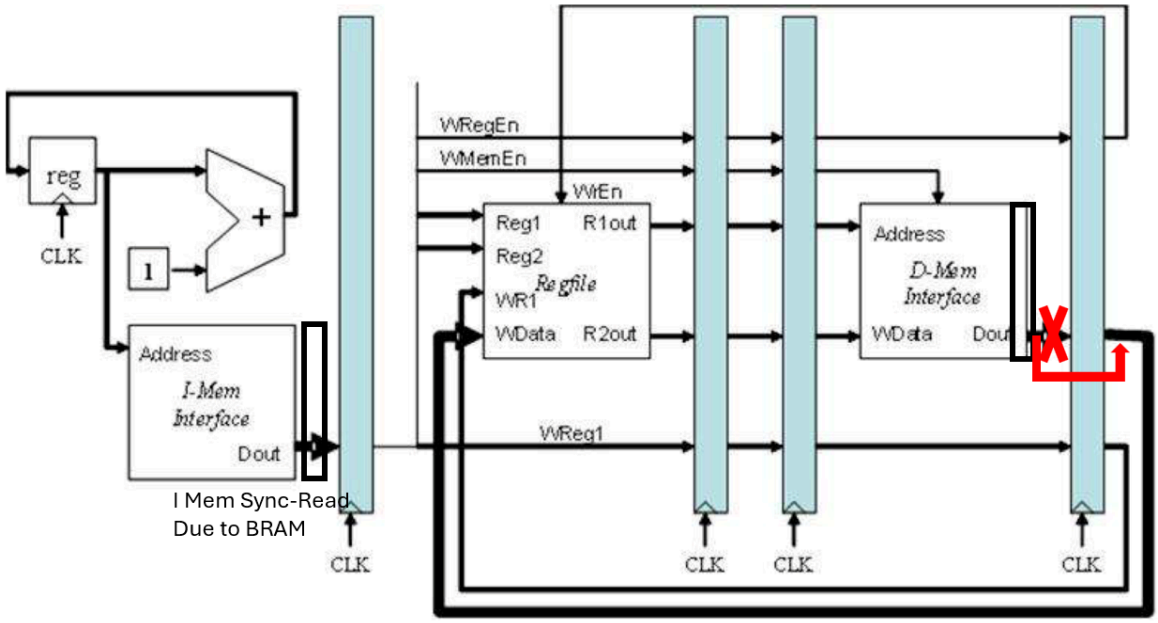

Figure 2. Front-end timing motivation

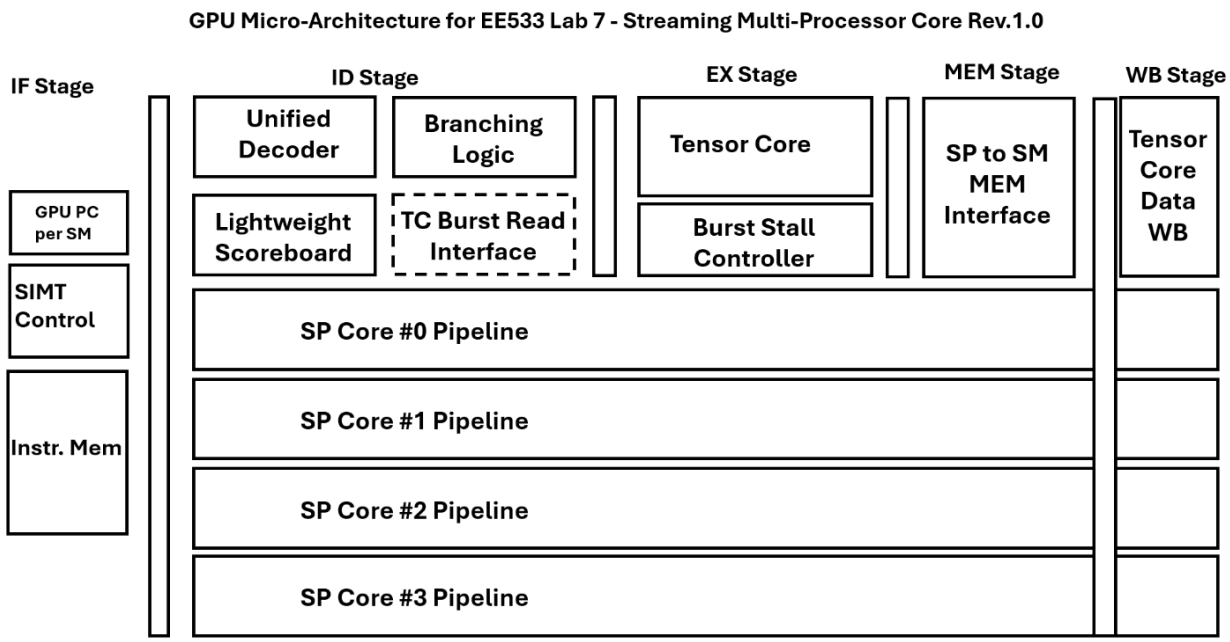

Figure 3. Simplified SM-level organization

4. Instruction Set Architecture

The custom ISA is defined centrally in gpu_define.v. The instruction word is 32 bits wide, and the ISA uses a 5-bit opcode, allowing 32 distinct instruction encodings. The ISA also includes a 1-bit datatype field (DT_INT16 or DT_BF16) and a 2-bit comparison mode for compare/set operations.

4.1 OPCODE CATEGORIES

The ISA includes the following major instruction classes:

- Memory operations: LD, ST, LDS, STS;
- Move operations: MOV, MOVI;
- Conversion: CVT;
- Arithmetic: ADD, SUB, MUL, FMA, MAX, MIN, ABS, NEG;
- Logical and shift: AND, OR, XOR, SHL, SHR;
- Immediate arithmetic: ADDI, MULI;
- Predicate/selection: SETP, SELP, SET;
- Control flow: BRA, PBRA, RET;
- Tensor instructions: WMMA_LOAD, WMMA_MMA, WMMA_STORE.

4.2 DATA TYPES AND COMPARISON SEMANTICS

The datatype bit determines whether the instruction is interpreted by the INT16 or BF16 execution path. Compare mode supports:

- equal,
- not equal,
- less than,
- less than or equal.

One important ISA detail is that SHR is implemented as an arithmetic right shift for INT16 data, matching the RTL behavior of the integer execution path.

5. Register Organization and Data Representation

In our current implementation, the physical register file is organized as a 16-entry, 16-bit, 4-read/4-write (4R4W) register file. This physical choice simplifies the RTL and maps well to the arithmetic units already implemented.

At the logical level, our design treats groups of four consecutive 16-bit registers as a packed 64-bit vector or fragment group, matching the spirit of the lab requirement while keeping the hardware structure manageable. This grouped-register view is also used by the tensor-style path, where fragments are represented by multiple adjacent registers.

The design also includes a predicate register file (pred_regfile.v) with 16 one-bit entries for conditional selection and branch control. Both register files support internal write-through forwarding for same-cycle RAW cases, which reduces unnecessary stalls for simple dependency patterns.

6. Front-End Control Path

6.1 FETCH UNIT

The fetch_unit.v module implements:

- a single program counter,
- kernel start control,

- branch redirect support,
- front-end stall handling,
- RET-based kernel termination,
- and an IF/ID pipeline register carrying instruction-valid and PC information.

This directly reflects the lab requirement for a single program counter and single instruction stream.

6.2 INSTRUCTION DECODE

The sm_decoder.v module decodes the 32-bit custom instruction word into:

- opcode, datatype, compare mode, register indices, and immediate values,
- writeback source selection,
- memory classification,
- branch classification,
- predicate read/write selection,
- scoreboard usage information,
- and WMMA-related operation classification.

This decoder serves as the main bridge between the custom machine-code format and the rest of the execution hardware.

6.3 SCOREBOARD

The scoreboard.v module implements a lightweight RAW hazard detector based on pending destination registers. It tracks dependencies for decode-stage source registers and can stall issue until dependent results are committed. This behavior is reflected in the integrated debug logs, where dependency-sensitive instruction sequences such as MUL followed by dependent ADD, as well as chained ADDI operations, visibly trigger scoreboard-related stalling before writeback completion.

7. Per-Thread SP Core Prototype

The sp_core.v provides a clearer per-thread execution prototype for the architecture. Each SP core includes:

- the 4R4W GPR register file,
- the predicate register file,
- decode/execute pipeline logic;
- an INT16 execution unit,
- a BF16 execution unit,
- a BF16/INT16 conversion unit,
- writeback logic,
- and scoreboard feedback signals.

The SP core is parameterized by a thread ID and includes a practical mechanism for handling threadIdx.x. In particular, a MOV.TID-style convention allows the fixed thread identifier to be inserted into the datapath, which is then used in address generation and per-thread kernel execution.

This behavior is not only structurally present in RTL but is also demonstrated in integrated regression. The updated SM-core debug log shows correct per-thread execution for arithmetic, memory access, MOV.TID, branching, and several tensor-style instruction sequences across all four SP instances.

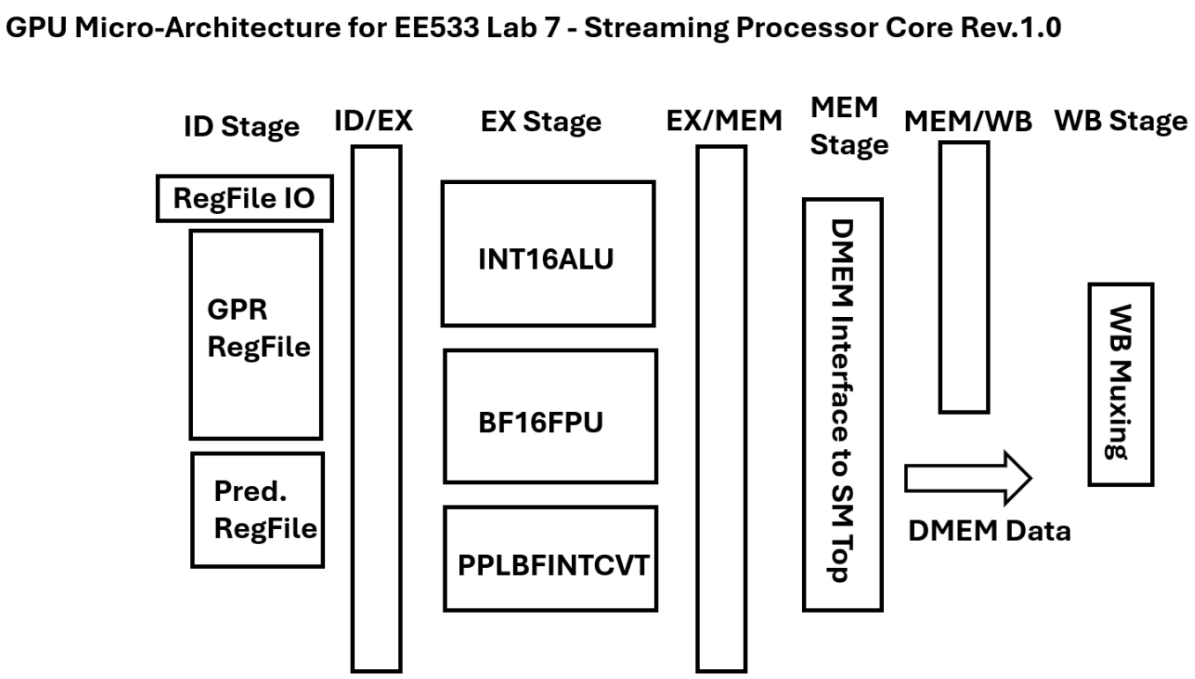

Figure 4. Micro-architecture of one streaming processor (SP) core

8. INT16 Arithmetic Path

The integer execution path is centered on int16alu.v and its supporting modules.

8.1 BASIC BLOCKS

The INT16 path includes:

- int16hca.v: a 16-bit Han-Carlson adder used as the base fast adder;
- int16addsub.v: an add/sub wrapper around the HCA;
- pplint16mult.v: a pipelined INT16 multiplier based on partial-product compression and CSA reduction;
- int16alu.v: the top-level INT16 ALU.

8.2 SUPPORTED OPERATIONS

The INT16 ALU supports:

- move and move-immediate;
- add, add-immediate, and subtract;
- negate and absolute value;
- bitwise AND/OR/XOR;
- shift left and shift right;
- max and min;
- select and compare-related output,
- address calculation for load/store,
- multiply and integer fused multiply-add.

8.3 INT16 VALIDATION STATUS

The integrated debug log confirms processor-level correctness for:

- basic MOVI + ADD,
- LD / ST,
- BRA,
- integer MUL,
- integer FMA,
- SUB, NEG, ABS,
- ADDI dependency chains,
- MAX / MIN,
- and logic/shift operations.

9. BF16 Arithmetic Path

9.1 MAJOR MODULES AND CONTROL MODEL

The BF16 path includes:
Instead of manually invoking each tool, we use assembler.sh to generate all required artifacts from a single C source file:

- bf16comp.v: BF16 comparison logic with NaN and sign-aware ordering;
- pplbf16addsub.v: pipelined BF16 addition/subtraction;
- pplbf16mult.v: pipelined BF16 multiplication;
- pplbfintcvt.v: BF16/INT16 conversion support;
- bf16fpu.v: top-level BF16 execution unit.

9.2 BF16 FPU CONTROL MODEL

The bf16fpu.v module uses an internal FSM with states such as:

- S_IDLE
- S_MULT
- S_ADD
- S_FMA_M
- S_FMA_A

This allows the unit to coordinate multicycle BF16 operations, especially multiply and FMA, without requiring a complex top-level control system. For the current project stage, this is a practical and robust design choice.

9.3 BF16 IMPLEMENTATION MODEL

Our BF16 arithmetic units are designed as practical engineering approximations. They support:

- normal BF16 arithmetic,
- major special cases such as zero, infinity, and NaN,
- BF16 comparison and selection,

- BF16 FMA behavior.

To reduce complexity, the BF16 datapath follows a flush-to-zero style simplification for very small values and does not preserve full denormal/subnormal behavior. This tradeoff is appropriate for the ANN-oriented focus of the project.

9.4 BF16 VALIDATION STATUS

The SM-top regression now successful PTX-kernel-level execution for:

- bf16_vector_mul,
- bf16_fma,
- and relu on BF16 inputs,

with all expected register and DMEM results passing across the four SP instances. The SM-core regression shows BF16 multiply, BF16 FMA, and BF16 ReLU cases passing in the integrated processor-style environment.

This is a meaningful improvement over the debug stage and allows the BF16 path to be described as substantially validated for the currently supported kernel subset.

10. Tensor-Style Acceleration Path

To address the lab's requirement for AI-oriented acceleration, we implemented a simplified tensor-style path rather than a full warp-level Tensor Core model.

10.1 TENSOR MODULES

The tensor path consists of:

- bf16pe.v: a BF16 processing element;
- bf16sa.v: a 4×4 systolic-array-style organization;
- tensor_core.v: a wrapper with S_LOAD, S_FEED, and S_DRAIN phases.

10.2 TENSOR OPERATION MODEL

The tensor wrapper is intended to support tile-style matrix accumulation of the form:

$$D=A\times B+C$$

using small BF16 fragments and a fixed systolic structure.

10.3 TENSOR VALIDATION STATUS

The debug results provide significantly strong evidence for the tensor path. In the SM-core regression, the following tensor-style operations pass:

- WMMA.LOAD
- WMMA.STORE
- uniform WMMA.MMA
- mixed-value MMA cases
- chained MMA execution
- per-thread tensor-style tile execution
- full WMMA.LOAD → WMMA.MMA → WMMA.STORE dataflow cases

The SM-top regression also includes a PTX-kernel-level wmma_bf16 4x4 matmul test, with all 64 checks passing and all

expected matrix results written correctly to DMEM.

For that reason, the tensor path can now be described more confidently as a validated custom tensor-style accelerator for the supported tile-level operation subset.

11. CUDA/PTX Translation Flow

A major part of the lab is the compilation pipeline from CUDA kernels to custom GPU machine code. The required flow is:

kernel.cu → nvcc -ptx -arch=sm_80 → kernel.ptx → custom translation scripts → gpu_program.hex

Our implementation follows this model using the Python script ptx_to_hex.py.

11.1 TRANSLATION STRATEGY

The translator performs **pattern-based PTX lowering** rather than full PTX compilation. It:

- parses kernel bodies,
- handles inline PTX-style patterns,
- maps PTX virtual registers onto the custom register space,
- emits custom assembly,
- and emits hex machine-code output.

11.2 SUPPORTED KERNELS

The current software flow supports the following basic CUDA kernels in kernel.cu:

- integer vector addition,
- integer vector subtraction,
- BF16 vector multiply,
- BF16 fused multiply-add,
- BF16 ReLU,
- and a WMMA-style BF16 4×4 matrix multiplication case.

11.3 REGISTER ALLOCATION AND ADDRESS SIMPLIFICATION

The Python translator uses a liveness-based register allocation strategy to map PTX temporary registers onto the 16 physical custom registers. It also simplifies the PTX memory model by flattening .param and .global references into a unified custom address model for generated machine code.

11.4 REGISTER ALLOCATION AND ADDRESS SIMPLIFICATION

The SM-top regression is especially important because it validates PTX-derived kernels at the top-system level, not just hand-written instruction tests. The debug log shows that all six integrated PTX-kernel tests pass, with a final summary of 64 passed, 0 failed. This gives strong evidence that the end-to-end path from translated instructions to hardware execution is working for the currently supported kernel subset.

12. Mapping of threadIdx.x

The lab requires each design to explain how threadIdx.x is mapped onto the custom architecture. In our implementation,

threadIdx.x is not mapped to a SIMT warp model. Instead:

- Basic vector kernels: threadIdx.x is represented in a simplified scalarized form and used for address generation and indexing.
- SP-core prototype: a fixed thread ID parameter (TID) is inserted into the datapath through a simplified MOV.TID convention.
- Tensor-oriented kernels: PTX thread semantics are remapped into a fixed tile schedule rather than warp-style execution.

This gives the architecture a workable threadIdx.x interpretation without requiring SIMT hardware.

13. Verification and Testing

The lab requires verification through multiple CUDA kernels and encourages additional simulation support. Our codebase includes both module-level verification and integrated system-level regression.

13.1 MODULE-LEVEL VERIFICATION

The codebase includes dedicated RTL testbenches for major modules, including:

- int16hca_tb.v
- pplint16mult_tb.v
- pplbf16addsub_tb.v
- pplbf16mult_tb.v
- pplbfintcvt_tb.v
- bf16fpu_tb.v
- int16alu_tb.v
- fetch_unit_tb.v
- scoreboard_tb.v
- sm_decoder_tb.v
- sp_core_tb.v
- tensor_core_tb.v

These artifacts shows that the project has progressed beyond pure RTL writing into executable simulation-based testing.

13.2 SM-CORE INTEGRATED REGRESSION

The sm_core_debug.txt log provides a broad processor-level regression for the control skeleton and execution blocks. It covers:

- basic arithmetic,
- memory access,
- branching,
- scoreboard stalling,
- thread-ID propagation,
- logic and shift instructions,
- integer multiply and integer FMA,
- BF16 multiply, BF16 FMA, and BF16 ReLU,

- WMMA load/store/MMA,
- chained tensor-style operations,
- and PTX-inspired vector and tensor tests.

The final summary in the log reports:

- PASSED: 400
- FAILED: 0

13.3 SM-CORE INTEGRATED REGRESSION

The sm_top_debug.txt log verifies six PTX-kernel-level workloads:

- vec_add
- vec_sub
- bf16_vector_mul
- bf16_fma
- relu
- wmma_bf16 4x4 matmul

The final summary in this log reports:

- PASSED: 64
- FAILED: 0

This top-level regression is valuable because it validates the translated PTX-driven execution path rather than only hand-written micro-tests.

13.4 OVERALL VERIFICATION INTERPRETATION

Taken together, the updated debug results show that the project has progressed beyond isolated arithmetic modules into a meaningfully integrated processor-style prototype. The logs provide concrete evidence for:

- correct fetch/decode/writeback sequencing,
- working scoreboard-based stalling,
- correct per-thread execution across four SP instances,
- correct integer and BF16 kernel execution for the supported subset,
- and successful execution of a custom tensor-style matrix multiplication flow.

14. Conclusion

In this project, we developed a custom GPU-like accelerator architecture together with a PTX-driven software toolchain. The implementation now includes not only INT16 and BF16 arithmetic modules and a tensor-style computation path, but also a processor-style control skeleton consisting of a fetch unit, instruction decoder, scoreboard, register files, and a per-thread SP-core prototype.

Although the design does not implement SIMT and does not attempt to exactly reproduce NVIDIA Tensor Core behavior, it now demonstrates the main architectural goals of the lab in a much more complete way than before: a standalone custom ISA, a single-instruction-stream GPU-style execution model, PTX-based translation into custom machine code, validated BF16 and INT16 arithmetic support, and a tensor-inspired hardware acceleration mechanism for ANN-oriented computation. In that sense, the project captures the essential architectural ideas of a modern AI-oriented GPU in a simplified and implementable form.

15. GitHub Repository and Team Contributions

GitHub Repository: https://github.com/jeremycai99/EE533-Labs/tree/main/Lab7
Contribution Summary:

- Jeremy Cai: Main SP and SM pipeline design and netfpga integration
- Prathamesh Hirekodi: Improvement on the parser and assist on the netfpga implementation
- Yanzhe Li: Explore methodology to transform PTX to team defined ISA and initial parser design

16. Appendix

We are not going to attach the full code in this report but please refer to the debug output for our pipeline design for both sm_core and sm_top with all passing result. For implementation details, please refer to github. Both testbench files have all 6 kernel design tested and verified.

```
sm_core_debug:
VCD info: dumpfile sm_core_tb.vcd opened for output.
============================================
  SM Core Testbench — Starting
============================================

--- K1: Basic ALU (MOVI + ADD) ---
  [C000] PC=0 ir=00000000 dec=00000000 NOP      fv=0 lat=0 | fstl=0 sb=0 exb=0 sps=0 f
  [C001] PC=0 ir=20100064 dec=20100064 MOVI     fv=0 lat=0 | fstl=0 sb=0 exb=0 sps=0 f
  [C002] PC=1 ir=20100064 dec=20100064 MOVI     fv=1 lat=0 | fstl=0 sb=0 exb=0 sps=0 f
  [C003] PC=2 ir=202000c8 dec=202000c8 MOVI     fv=1 lat=0 | fstl=0 sb=0 exb=0 sps=0 f
  [C004] PC=3 ir=30312000 dec=30312000 ADD      fv=1 lat=0 | fstl=1 sb=1 exb=0 sps=0 f
  [C005] PC=3 ir=c8000000 dec=30312000 ADD      fv=1 lat=1 | fstl=1 sb=1 exb=0 sps=0 f
  [C006] PC=3 ir=c8000000 dec=30312000 ADD      fv=1 lat=1 | fstl=0 sb=0 exb=0 sps=0 f
  [C007] PC=4 ir=c8000000 dec=c8000000 RET      fv=1 lat=0 | fstl=0 sb=0 exb=0 sps=0 f
  [C008] PC=4 ir=00000000 dec=00000000 NOP      fv=0 lat=0 | fstl=0 sb=0 exb=0 sps=0 f
  [C009] PC=4 ir=00000000 dec=00000000 NOP      fv=0 lat=0 | fstl=0 sb=0 exb=0 sps=0 f
  [C010] PC=4 ir=00000000 dec=00000000 NOP      fv=0 lat=0 | fstl=0 sb=0 exb=0 sps=0 f
  [C011] PC=4 ir=00000000 dec=00000000 NOP      fv=0 lat=0 | fstl=0 sb=0 exb=0 sps=0 f
[PASS] T1: K1 R1=100  SP0.R1 = 0x0064
[PASS] T2: K1 R1=100  SP1.R1 = 0x0064
[PASS] T3: K1 R1=100  SP2.R1 = 0x0064
[PASS] T4: K1 R1=100  SP3.R1 = 0x0064
[PASS] T5: K1 R2=200  SP0.R2 = 0x00c8
[PASS] T6: K1 R2=200  SP1.R2 = 0x00c8
[PASS] T7: K1 R2=200  SP2.R2 = 0x00c8
[PASS] T8: K1 R2=200  SP3.R2 = 0x00c8
[PASS] T9: K1 R3=300  SP0.R3 = 0x012c
[PASS] T10: K1 R3=300  SP1.R3 = 0x012c
[PASS] T11: K1 R3=300  SP2.R3 = 0x012c
[PASS] T12: K1 R3=300  SP3.R3 = 0x012c

--- K2: Memory LD / ST ---
[PASS] T13: K2 R2=DMEM[10]  SP0.R2 = 0xabcd
[PASS] T14: K2 R2=DMEM[10]  SP1.R2 = 0xabcd
```

```
[PASS] T15: K2 R2=DMEM[10]  SP2.R2 = 0xabcd
[PASS] T16: K2 R2=DMEM[10]  SP3.R2 = 0xabcd
[PASS] T17: K2 R3=R2+1  SP0.R3 = 0xabce
[PASS] T18: K2 R3=R2+1  SP1.R3 = 0xabce
[PASS] T19: K2 R3=R2+1  SP2.R3 = 0xabce
[PASS] T20: K2 R3=R2+1  SP3.R3 = 0xabce
[PASS] T21: K2 DMEM[15]=R3  SP0.DMEM[15] = 0xabce
[PASS] T22: K2 DMEM[15]=R3  SP1.DMEM[15] = 0xabce
[PASS] T23: K2 DMEM[15]=R3  SP2.DMEM[15] = 0xabce
[PASS] T24: K2 DMEM[15]=R3  SP3.DMEM[15] = 0xabce

--- K3: Branch (BRA) ---
[PASS] T25: K3 R1=42 (not overwritten)  SP0.R1 = 0x002a
[PASS] T26: K3 R1=42 (not overwritten)  SP1.R1 = 0x002a
[PASS] T27: K3 R1=42 (not overwritten)  SP2.R1 = 0x002a
[PASS] T28: K3 R1=42 (not overwritten)  SP3.R1 = 0x002a
[PASS] T29: K3 R2=55 (after branch)  SP0.R2 = 0x0037
[PASS] T30: K3 R2=55 (after branch)  SP1.R2 = 0x0037
[PASS] T31: K3 R2=55 (after branch)  SP2.R2 = 0x0037
[PASS] T32: K3 R2=55 (after branch)  SP3.R2 = 0x0037

--- K4: MUL + Scoreboard Stall ---
  [C000] PC=0 ir=00000000 dec=00000000 NOP      fv=0 lat=0 | fstl=0 sb=0 exb=0 sps=0 f
  [C001] PC=0 ir=20100003 dec=20100003 MOVI     fv=0 lat=0 | fstl=0 sb=0 exb=0 sps=0 f
  [C002] PC=1 ir=20100003 dec=20100003 MOVI     fv=1 lat=0 | fstl=0 sb=0 exb=0 sps=0 f
  [C003] PC=2 ir=20200007 dec=20200007 MOVI     fv=1 lat=0 | fstl=0 sb=0 exb=0 sps=0 f
  [C004] PC=3 ir=40312000 dec=40312000 MUL      fv=1 lat=0 | fstl=1 sb=1 exb=0 sps=0 f
  [C005] PC=3 ir=30431000 dec=40312000 MUL      fv=1 lat=1 | fstl=1 sb=1 exb=0 sps=0 f
  [C006] PC=3 ir=30431000 dec=40312000 MUL      fv=1 lat=1 | fstl=0 sb=0 exb=0 sps=0 f
  [C007] PC=4 ir=30431000 dec=30431000 ADD      fv=1 lat=0 | fstl=1 sb=1 exb=1 sps=1 f
  [C008] PC=4 ir=c8000000 dec=30431000 ADD      fv=1 lat=1 | fstl=1 sb=1 exb=1 sps=1 f
  [C009] PC=4 ir=c8000000 dec=30431000 ADD      fv=1 lat=1 | fstl=1 sb=1 exb=0 sps=0 f
  [C010] PC=4 ir=c8000000 dec=30431000 ADD      fv=1 lat=1 | fstl=1 sb=1 exb=0 sps=0 f
  [C011] PC=4 ir=c8000000 dec=30431000 ADD      fv=1 lat=1 | fstl=0 sb=0 exb=0 sps=0 f
  [C012] PC=5 ir=c8000000 dec=c8000000 RET      fv=1 lat=0 | fstl=0 sb=0 exb=0 sps=0 f
  [C013] PC=5 ir=00000000 dec=00000000 NOP      fv=0 lat=0 | fstl=0 sb=0 exb=0 sps=0 f
  [C014] PC=5 ir=00000000 dec=00000000 NOP      fv=0 lat=0 | fstl=0 sb=0 exb=0 sps=0 f
  [C015] PC=5 ir=00000000 dec=00000000 NOP      fv=0 lat=0 | fstl=0 sb=0 exb=0 sps=0 f
  [C016] PC=5 ir=00000000 dec=00000000 NOP      fv=0 lat=0 | fstl=0 sb=0 exb=0 sps=0 f
[PASS] T33: K4 R3=3*7=21  SP0.R3 = 0x0015
[PASS] T34: K4 R3=3*7=21  SP1.R3 = 0x0015
[PASS] T35: K4 R3=3*7=21  SP2.R3 = 0x0015
[PASS] T36: K4 R3=3*7=21  SP3.R3 = 0x0015
[PASS] T37: K4 R4=21+3=24  SP0.R4 = 0x0018
[PASS] T38: K4 R4=21+3=24  SP1.R4 = 0x0018
[PASS] T39: K4 R4=21+3=24  SP2.R4 = 0x0018
[PASS] T40: K4 R4=21+3=24  SP3.R4 = 0x0018

--- K5: MOV.TID ---
[PASS] T41: K5 SP0.R1=TID0  SP0.R1 = 0x0000
[PASS] T42: K5 SP1.R1=TID1  SP1.R1 = 0x0001
[PASS] T43: K5 SP2.R1=TID2  SP2.R1 = 0x0002
[PASS] T44: K5 SP3.R1=TID3  SP3.R1 = 0x0003

--- K6: Back-to-back MOVI (no hazard) ---
```

```
[PASS] T45: K6 R1=10  SP0.R1 = 0x000a
[PASS] T46: K6 R1=10  SP1.R1 = 0x000a
[PASS] T47: K6 R1=10  SP2.R1 = 0x000a
[PASS] T48: K6 R1=10  SP3.R1 = 0x000a
[PASS] T49: K6 R2=20  SP0.R2 = 0x0014
[PASS] T50: K6 R2=20  SP1.R2 = 0x0014
[PASS] T51: K6 R2=20  SP2.R2 = 0x0014
[PASS] T52: K6 R2=20  SP3.R2 = 0x0014
[PASS] T53: K6 R3=30  SP0.R3 = 0x001e
[PASS] T54: K6 R3=30  SP1.R3 = 0x001e
[PASS] T55: K6 R3=30  SP2.R3 = 0x001e
[PASS] T56: K6 R3=30  SP3.R3 = 0x001e
[PASS] T57: K6 R4=40  SP0.R4 = 0x0028
[PASS] T58: K6 R4=40  SP1.R4 = 0x0028
[PASS] T59: K6 R4=40  SP2.R4 = 0x0028
[PASS] T60: K6 R4=40  SP3.R4 = 0x0028
[PASS] T61: K6 R5=50  SP0.R5 = 0x0032
[PASS] T62: K6 R5=50  SP1.R5 = 0x0032
[PASS] T63: K6 R5=50  SP2.R5 = 0x0032
[PASS] T64: K6 R5=50  SP3.R5 = 0x0032

--- K7: Per-thread LD/ST ---
[PASS] T65: K7 SP0 DMEM[100]  SP0.DMEM[100] = 0xcafe
[PASS] T66: K7 SP1 DMEM[101]  SP1.DMEM[101] = 0xcafe
[PASS] T67: K7 SP2 DMEM[102]  SP2.DMEM[102] = 0xcafe
[PASS] T68: K7 SP3 DMEM[103]  SP3.DMEM[103] = 0xcafe
[PASS] T69: K7 R3=loaded CAFE  SP0.R3 = 0xcafe
[PASS] T70: K7 R3=loaded CAFE  SP1.R3 = 0xcafe
[PASS] T71: K7 R3=loaded CAFE  SP2.R3 = 0xcafe
[PASS] T72: K7 R3=loaded CAFE  SP3.R3 = 0xcafe

--- K8: Logic + Shift ---
[PASS] T73: K8 AND  SP0.R3 = 0x000f
[PASS] T74: K8 AND  SP1.R3 = 0x000f
[PASS] T75: K8 AND  SP2.R3 = 0x000f
[PASS] T76: K8 AND  SP3.R3 = 0x000f
[PASS] T77: K8 OR  SP0.R4 = 0x0fff
[PASS] T78: K8 OR  SP1.R4 = 0x0fff
[PASS] T79: K8 OR  SP2.R4 = 0x0fff
[PASS] T80: K8 OR  SP3.R4 = 0x0fff
[PASS] T81: K8 XOR  SP0.R5 = 0x0ff0
[PASS] T82: K8 XOR  SP1.R5 = 0x0ff0
[PASS] T83: K8 XOR  SP2.R5 = 0x0ff0
[PASS] T84: K8 XOR  SP3.R5 = 0x0ff0
[PASS] T85: K8 SHL 4  SP0.R6 = 0x0ff0
[PASS] T86: K8 SHL 4  SP1.R6 = 0x0ff0
[PASS] T87: K8 SHL 4  SP2.R6 = 0x0ff0
[PASS] T88: K8 SHL 4  SP3.R6 = 0x0ff0
[PASS] T89: K8 SHR 4  SP0.R7 = 0x000f
[PASS] T90: K8 SHR 4  SP1.R7 = 0x000f
[PASS] T91: K8 SHR 4  SP2.R7 = 0x000f
[PASS] T92: K8 SHR 4  SP3.R7 = 0x000f

--- K9: FMA ---
[PASS] T93: K9 FMA 5*6+10=40  SP0.R3 = 0x0028
```

```
[PASS] T94: K9 FMA 5*6+10=40  SP1.R3 = 0x0028
[PASS] T95: K9 FMA 5*6+10=40  SP2.R3 = 0x0028
[PASS] T96: K9 FMA 5*6+10=40  SP3.R3 = 0x0028

--- K10: Non-zero entry PC ---
[PASS] T97: K10 R1=0xBEEF  SP0.R1 = 0xbeef
[PASS] T98: K10 R1=0xBEEF  SP1.R1 = 0xbeef
[PASS] T99: K10 R1=0xBEEF  SP2.R1 = 0xbeef
[PASS] T100: K10 R1=0xBEEF  SP3.R1 = 0xbeef
[PASS] T101: K10 R2=0xDEAD  SP0.R2 = 0xdead
[PASS] T102: K10 R2=0xDEAD  SP1.R2 = 0xdead
[PASS] T103: K10 R2=0xDEAD  SP2.R2 = 0xdead
[PASS] T104: K10 R2=0xDEAD  SP3.R2 = 0xdead

--- K11: SUB + NEG + ABS ---
[PASS] T105: K11 SUB 30-50=-20  SP0.R3 = 0xffec
[PASS] T106: K11 SUB 30-50=-20  SP1.R3 = 0xffec
[PASS] T107: K11 SUB 30-50=-20  SP2.R3 = 0xffec
[PASS] T108: K11 SUB 30-50=-20  SP3.R3 = 0xffec
[PASS] T109: K11 NEG(-20)=20  SP0.R4 = 0x0014
[PASS] T110: K11 NEG(-20)=20  SP1.R4 = 0x0014
[PASS] T111: K11 NEG(-20)=20  SP2.R4 = 0x0014
[PASS] T112: K11 NEG(-20)=20  SP3.R4 = 0x0014
[PASS] T113: K11 ABS(-20)=20  SP0.R5 = 0x0014
[PASS] T114: K11 ABS(-20)=20  SP1.R5 = 0x0014
[PASS] T115: K11 ABS(-20)=20  SP2.R5 = 0x0014
[PASS] T116: K11 ABS(-20)=20  SP3.R5 = 0x0014

--- K12: ADDI chain (scoreboard stress) ---
  [C000] PC=0 ir=00000000 dec=00000000 NOP      fv=0 lat=0 | fstl=0 sb=0 exb=0 sps=0 f
  [C001] PC=0 ir=20100000 dec=20100000 MOVI     fv=0 lat=0 | fstl=0 sb=0 exb=0 sps=0 f
  [C002] PC=1 ir=20100000 dec=20100000 MOVI     fv=1 lat=0 | fstl=0 sb=0 exb=0 sps=0 f
  [C003] PC=2 ir=98110001 dec=98110001 ADDI     fv=1 lat=0 | fstl=1 sb=1 exb=0 sps=0 f
  [C004] PC=2 ir=98110001 dec=98110001 ADDI     fv=1 lat=1 | fstl=1 sb=1 exb=0 sps=0 f
  [C005] PC=2 ir=98110001 dec=98110001 ADDI     fv=1 lat=1 | fstl=0 sb=0 exb=0 sps=0 f
  [C006] PC=3 ir=98110001 dec=98110001 ADDI     fv=1 lat=0 | fstl=1 sb=1 exb=0 sps=0 f
  [C007] PC=3 ir=98110001 dec=98110001 ADDI     fv=1 lat=1 | fstl=1 sb=1 exb=0 sps=0 f
  [C008] PC=3 ir=98110001 dec=98110001 ADDI     fv=1 lat=1 | fstl=0 sb=0 exb=0 sps=0 f
  [C009] PC=4 ir=98110001 dec=98110001 ADDI     fv=1 lat=0 | fstl=1 sb=1 exb=0 sps=0 f
  [C010] PC=4 ir=98110001 dec=98110001 ADDI     fv=1 lat=1 | fstl=1 sb=1 exb=0 sps=0 f
  [C011] PC=4 ir=98110001 dec=98110001 ADDI     fv=1 lat=1 | fstl=0 sb=0 exb=0 sps=0 f
  [C012] PC=5 ir=98110001 dec=98110001 ADDI     fv=1 lat=0 | fstl=1 sb=1 exb=0 sps=0 f
  [C013] PC=5 ir=c8000000 dec=98110001 ADDI     fv=1 lat=1 | fstl=1 sb=1 exb=0 sps=0 f
  [C014] PC=5 ir=c8000000 dec=98110001 ADDI     fv=1 lat=1 | fstl=0 sb=0 exb=0 sps=0 f
  [C015] PC=6 ir=c8000000 dec=c8000000 RET      fv=1 lat=0 | fstl=0 sb=0 exb=0 sps=0 f
  [C016] PC=6 ir=00000000 dec=00000000 NOP      fv=0 lat=0 | fstl=0 sb=0 exb=0 sps=0 f
  [C017] PC=6 ir=00000000 dec=00000000 NOP      fv=0 lat=0 | fstl=0 sb=0 exb=0 sps=0 f
  [C018] PC=6 ir=00000000 dec=00000000 NOP      fv=0 lat=0 | fstl=0 sb=0 exb=0 sps=0 f
  [C019] PC=6 ir=00000000 dec=00000000 NOP      fv=0 lat=0 | fstl=0 sb=0 exb=0 sps=0 f
[PASS] T117: K12 ADDI chain R1=4  SP0.R1 = 0x0004
[PASS] T118: K12 ADDI chain R1=4  SP1.R1 = 0x0004
[PASS] T119: K12 ADDI chain R1=4  SP2.R1 = 0x0004
[PASS] T120: K12 ADDI chain R1=4  SP3.R1 = 0x0004

--- K13: MAX / MIN ---
```

```
[PASS] T121: K13 MAX(100,200)=200  SP0.R3 = 0x00c8
[PASS] T122: K13 MAX(100,200)=200  SP1.R3 = 0x00c8
[PASS] T123: K13 MAX(100,200)=200  SP2.R3 = 0x00c8
[PASS] T124: K13 MAX(100,200)=200  SP3.R3 = 0x00c8
[PASS] T125: K13 MIN(100,200)=100  SP0.R4 = 0x0064
[PASS] T126: K13 MIN(100,200)=100  SP1.R4 = 0x0064
[PASS] T127: K13 MIN(100,200)=100  SP2.R4 = 0x0064
[PASS] T128: K13 MIN(100,200)=100  SP3.R4 = 0x0064

--- K14: WMMA.LOAD basic ---
[PASS] T129: K14 R4=0x1111  SP0.R4 = 0x1111
[PASS] T130: K14 R4=0x1111  SP1.R4 = 0x1111
[PASS] T131: K14 R4=0x1111  SP2.R4 = 0x1111
[PASS] T132: K14 R4=0x1111  SP3.R4 = 0x1111
[PASS] T133: K14 R5=0x2222  SP0.R5 = 0x2222
[PASS] T134: K14 R5=0x2222  SP1.R5 = 0x2222
[PASS] T135: K14 R5=0x2222  SP2.R5 = 0x2222
[PASS] T136: K14 R5=0x2222  SP3.R5 = 0x2222
[PASS] T137: K14 R6=0x3333  SP0.R6 = 0x3333
[PASS] T138: K14 R6=0x3333  SP1.R6 = 0x3333
[PASS] T139: K14 R6=0x3333  SP2.R6 = 0x3333
[PASS] T140: K14 R6=0x3333  SP3.R6 = 0x3333
[PASS] T141: K14 R7=0x4444  SP0.R7 = 0x4444
[PASS] T142: K14 R7=0x4444  SP1.R7 = 0x4444
[PASS] T143: K14 R7=0x4444  SP2.R7 = 0x4444
[PASS] T144: K14 R7=0x4444  SP3.R7 = 0x4444

--- K15: WMMA.STORE basic ---
[PASS] T145: K15 DMEM[300]=0x1234  SP0.DMEM[300] = 0x1234
[PASS] T146: K15 DMEM[300]=0x1234  SP1.DMEM[300] = 0x1234
[PASS] T147: K15 DMEM[300]=0x1234  SP2.DMEM[300] = 0x1234
[PASS] T148: K15 DMEM[300]=0x1234  SP3.DMEM[300] = 0x1234
[PASS] T149: K15 DMEM[301]=0x5678  SP0.DMEM[301] = 0x5678
[PASS] T150: K15 DMEM[301]=0x5678  SP1.DMEM[301] = 0x5678
[PASS] T151: K15 DMEM[301]=0x5678  SP2.DMEM[301] = 0x5678
[PASS] T152: K15 DMEM[301]=0x5678  SP3.DMEM[301] = 0x5678
[PASS] T153: K15 DMEM[302]=0x9ABC  SP0.DMEM[302] = 0x9abc
[PASS] T154: K15 DMEM[302]=0x9ABC  SP1.DMEM[302] = 0x9abc
[PASS] T155: K15 DMEM[302]=0x9ABC  SP2.DMEM[302] = 0x9abc
[PASS] T156: K15 DMEM[302]=0x9ABC  SP3.DMEM[302] = 0x9abc
[PASS] T157: K15 DMEM[303]=0xDEF0  SP0.DMEM[303] = 0xdef0
[PASS] T158: K15 DMEM[303]=0xDEF0  SP1.DMEM[303] = 0xdef0
[PASS] T159: K15 DMEM[303]=0xDEF0  SP2.DMEM[303] = 0xdef0
[PASS] T160: K15 DMEM[303]=0xDEF0  SP3.DMEM[303] = 0xdef0

--- K16: WMMA.MMA uniform 1*1+0=4.0 ---
  Computation: D = A*B + C = ones(4)*ones(4) + zeros(4) = 4*ones(4)
  Program listing:
    [ 0] 20003f80  MOVI    R0, 16256 (0x3f80)
    [ 1] 20103f80  MOVI    R1, 16256 (0x3f80)
    [ 2] 20203f80  MOVI    R2, 16256 (0x3f80)
    [ 3] 20303f80  MOVI    R3, 16256 (0x3f80)
    [ 4] 20403f80  MOVI    R4, 16256 (0x3f80)
    [ 5] 20503f80  MOVI    R5, 16256 (0x3f80)
    [ 6] 20603f80  MOVI    R6, 16256 (0x3f80)
```

```
  [ 7] 20703f80  MOVI    R7, 16256 (0x3f80)
  [ 8] ecc04800  WMMA.MMA  D=R12..15, A=R0..3, B=R4..7, C=R8..11
  [ 9] c8000000  RET
[C000] PC=0 ir=00000000 dec=00000000 NOP      fv=0 lat=0 | fstl=0 sb=0 exb=0 sps=0 f
[C001] PC=0 ir=20003f80 dec=20003f80 MOVI     fv=0 lat=0 | fstl=0 sb=0 exb=0 sps=0 f
[C002] PC=1 ir=20003f80 dec=20003f80 MOVI     fv=1 lat=0 | fstl=0 sb=0 exb=0 sps=0 f
[C003] PC=2 ir=20103f80 dec=20103f80 MOVI     fv=1 lat=0 | fstl=0 sb=0 exb=0 sps=0 f
[C004] PC=3 ir=20203f80 dec=20203f80 MOVI     fv=1 lat=0 | fstl=0 sb=0 exb=0 sps=0 f
[C005] PC=4 ir=20303f80 dec=20303f80 MOVI     fv=1 lat=0 | fstl=0 sb=0 exb=0 sps=0 f
[C006] PC=5 ir=20403f80 dec=20403f80 MOVI     fv=1 lat=0 | fstl=0 sb=0 exb=0 sps=0 f
[C007] PC=6 ir=20503f80 dec=20503f80 MOVI     fv=1 lat=0 | fstl=0 sb=0 exb=0 sps=0 f
[C008] PC=7 ir=20603f80 dec=20603f80 MOVI     fv=1 lat=0 | fstl=0 sb=0 exb=0 sps=0 f
[C009] PC=8 ir=20703f80 dec=20703f80 MOVI     fv=1 lat=0 | fstl=0 sb=0 exb=0 sps=0 f
[C010] PC=9 ir=ecc04800 dec=ecc04800 WMMA.MMA fv=1 lat=0 | fstl=1 sb=0 exb=0 sps=0 f
[C011] PC=9 ir=c8000000 dec=ecc04800 WMMA.MMA fv=1 lat=1 | fstl=1 sb=0 exb=0 sps=0 f
[C012] PC=9 ir=c8000000 dec=ecc04800 WMMA.MMA fv=1 lat=1 | fstl=1 sb=0 exb=0 sps=0 f
[C013] PC=9 ir=c8000000 dec=ecc04800 WMMA.MMA fv=1 lat=1 | fstl=0 sb=0 exb=0 sps=0 f
[C014] PC=10 ir=c8000000 dec=c8000000 RET      fv=1 lat=0 | fstl=1 sb=0 exb=0 sps=1
[C015] PC=10 ir=00000000 dec=c8000000 RET      fv=1 lat=1 | fstl=1 sb=0 exb=0 sps=1
[C016] PC=10 ir=00000000 dec=c8000000 RET      fv=1 lat=1 | fstl=1 sb=0 exb=0 sps=1
[C017] PC=10 ir=00000000 dec=c8000000 RET      fv=1 lat=1 | fstl=1 sb=0 exb=0 sps=1
[C018] PC=10 ir=00000000 dec=c8000000 RET      fv=1 lat=1 | fstl=1 sb=0 exb=0 sps=1
[C019] PC=10 ir=00000000 dec=c8000000 RET      fv=1 lat=1 | fstl=1 sb=0 exb=0 sps=1
[C020] PC=10 ir=00000000 dec=c8000000 RET      fv=1 lat=1 | fstl=1 sb=0 exb=0 sps=1
[C021] PC=10 ir=00000000 dec=c8000000 RET      fv=1 lat=1 | fstl=1 sb=0 exb=0 sps=1
[C022] PC=10 ir=00000000 dec=c8000000 RET      fv=1 lat=1 | fstl=1 sb=0 exb=0 sps=1
[C023] PC=10 ir=00000000 dec=c8000000 RET      fv=1 lat=1 | fstl=1 sb=0 exb=0 sps=1
[C024] PC=10 ir=00000000 dec=c8000000 RET      fv=1 lat=1 | fstl=1 sb=0 exb=0 sps=1
[C025] PC=10 ir=00000000 dec=c8000000 RET      fv=1 lat=1 | fstl=1 sb=0 exb=0 sps=1
[C026] PC=10 ir=00000000 dec=c8000000 RET      fv=1 lat=1 | fstl=1 sb=0 exb=0 sps=1
[C027] PC=10 ir=00000000 dec=c8000000 RET      fv=1 lat=1 | fstl=1 sb=0 exb=0 sps=1
[C028] PC=10 ir=00000000 dec=c8000000 RET      fv=1 lat=1 | fstl=1 sb=0 exb=0 sps=1
[C029] PC=10 ir=00000000 dec=c8000000 RET      fv=1 lat=1 | fstl=1 sb=0 exb=0 sps=1
[C030] PC=10 ir=00000000 dec=c8000000 RET      fv=1 lat=1 | fstl=1 sb=0 exb=0 sps=1
[C031] PC=10 ir=00000000 dec=c8000000 RET      fv=1 lat=1 | fstl=1 sb=0 exb=0 sps=1
[C032] PC=10 ir=00000000 dec=c8000000 RET      fv=1 lat=1 | fstl=1 sb=0 exb=0 sps=1
[C033] PC=10 ir=00000000 dec=c8000000 RET      fv=1 lat=1 | fstl=1 sb=0 exb=0 sps=1
[C034] PC=10 ir=00000000 dec=c8000000 RET      fv=1 lat=1 | fstl=1 sb=0 exb=0 sps=1
[C035] PC=10 ir=00000000 dec=c8000000 RET      fv=1 lat=1 | fstl=1 sb=0 exb=0 sps=1
[C036] PC=10 ir=00000000 dec=c8000000 RET      fv=1 lat=1 | fstl=1 sb=0 exb=0 sps=1
[C037] PC=10 ir=00000000 dec=c8000000 RET      fv=1 lat=1 | fstl=1 sb=0 exb=0 sps=1
[C038] PC=10 ir=00000000 dec=c8000000 RET      fv=1 lat=1 | fstl=1 sb=0 exb=0 sps=1
[C039] PC=10 ir=00000000 dec=c8000000 RET      fv=1 lat=1 | fstl=1 sb=0 exb=0 sps=1
[C040] PC=10 ir=00000000 dec=c8000000 RET      fv=1 lat=1 | fstl=1 sb=0 exb=0 sps=1
[C041] PC=10 ir=00000000 dec=c8000000 RET      fv=1 lat=1 | fstl=1 sb=0 exb=0 sps=1
[C042] PC=10 ir=00000000 dec=c8000000 RET      fv=1 lat=1 | fstl=1 sb=0 exb=0 sps=1
[C043] PC=10 ir=00000000 dec=c8000000 RET      fv=1 lat=1 | fstl=1 sb=0 exb=0 sps=1
[C044] PC=10 ir=00000000 dec=c8000000 RET      fv=1 lat=1 | fstl=1 sb=0 exb=0 sps=1
[C045] PC=10 ir=00000000 dec=c8000000 RET      fv=1 lat=1 | fstl=1 sb=0 exb=0 sps=1
[C046] PC=10 ir=00000000 dec=c8000000 RET      fv=1 lat=1 | fstl=1 sb=0 exb=0 sps=1
[C047] PC=10 ir=00000000 dec=c8000000 RET      fv=1 lat=1 | fstl=1 sb=0 exb=0 sps=1
[C048] PC=10 ir=00000000 dec=c8000000 RET      fv=1 lat=1 | fstl=1 sb=0 exb=0 sps=1
[C049] PC=10 ir=00000000 dec=c8000000 RET      fv=1 lat=1 | fstl=1 sb=0 exb=0 sps=1
[C050] PC=10 ir=00000000 dec=c8000000 RET      fv=1 lat=1 | fstl=1 sb=0 exb=0 sps=1
[C051] PC=10 ir=00000000 dec=c8000000 RET      fv=1 lat=1 | fstl=1 sb=0 exb=0 sps=1
```

```
  [C052] PC=10 ir=00000000 dec=c8000000 RET      fv=1 lat=1 | fstl=1 sb=0 exb=0 sps=1
  [C053] PC=10 ir=00000000 dec=c8000000 RET      fv=1 lat=1 | fstl=1 sb=0 exb=0 sps=1
  [C054] PC=10 ir=00000000 dec=c8000000 RET      fv=1 lat=1 | fstl=1 sb=0 exb=0 sps=1
  [C055] PC=10 ir=00000000 dec=c8000000 RET      fv=1 lat=1 | fstl=1 sb=0 exb=0 sps=1
  [C056] PC=10 ir=00000000 dec=c8000000 RET      fv=1 lat=1 | fstl=1 sb=0 exb=0 sps=1
  [C057] PC=10 ir=00000000 dec=c8000000 RET      fv=1 lat=1 | fstl=0 sb=0 exb=0 sps=0
  [C058] PC=10 ir=00000000 dec=00000000 NOP      fv=0 lat=0 | fstl=0 sb=0 exb=0 sps=0
  [C059] PC=10 ir=00000000 dec=00000000 NOP      fv=0 lat=0 | fstl=0 sb=0 exb=0 sps=0
  [C060] PC=10 ir=00000000 dec=00000000 NOP      fv=0 lat=0 | fstl=0 sb=0 exb=0 sps=0
  [C061] PC=10 ir=00000000 dec=00000000 NOP      fv=0 lat=0 | fstl=0 sb=0 exb=0 sps=0
  Post-exec RF dump:
  RF dump       R0     R1     R2     R3     R4     R5     R6     R7     R8     R9
       SP0:   3f80  3f80  3f80  3f80  3f80  3f80  3f80  3f80  0000  0000  0000  0000
       SP1:   3f80  3f80  3f80  3f80  3f80  3f80  3f80  3f80  0000  0000  0000  0000
       SP2:   3f80  3f80  3f80  3f80  3f80  3f80  3f80  3f80  0000  0000  0000  0000
       SP3:   3f80  3f80  3f80  3f80  3f80  3f80  3f80  3f80  0000  0000  0000  0000
[PASS] T161: K16 D[i][0]=4.0  SP0.R12 = 0x4080
[PASS] T162: K16 D[i][0]=4.0  SP1.R12 = 0x4080
[PASS] T163: K16 D[i][0]=4.0  SP2.R12 = 0x4080
[PASS] T164: K16 D[i][0]=4.0  SP3.R12 = 0x4080
[PASS] T165: K16 D[i][1]=4.0  SP0.R13 = 0x4080
[PASS] T166: K16 D[i][1]=4.0  SP1.R13 = 0x4080
[PASS] T167: K16 D[i][1]=4.0  SP2.R13 = 0x4080
[PASS] T168: K16 D[i][1]=4.0  SP3.R13 = 0x4080
[PASS] T169: K16 D[i][2]=4.0  SP0.R14 = 0x4080
[PASS] T170: K16 D[i][2]=4.0  SP1.R14 = 0x4080
[PASS] T171: K16 D[i][2]=4.0  SP2.R14 = 0x4080
[PASS] T172: K16 D[i][2]=4.0  SP3.R14 = 0x4080
[PASS] T173: K16 D[i][3]=4.0  SP0.R15 = 0x4080
[PASS] T174: K16 D[i][3]=4.0  SP1.R15 = 0x4080
[PASS] T175: K16 D[i][3]=4.0  SP2.R15 = 0x4080
[PASS] T176: K16 D[i][3]=4.0  SP3.R15 = 0x4080

--- K17: WMMA.MMA 2*3+1=25.0 ---
  Computation: D = A*B + C = 2*ones(4) * 3*ones(4) + ones(4)
             = 4*(2*3)*ones(4) + ones(4) = 24+1 = 25.0
  Program listing:
    [ 0] 20004000  MOVI    R0, 16384 (0x4000)
    [ 1] 20104000  MOVI    R1, 16384 (0x4000)
    [ 2] 20204000  MOVI    R2, 16384 (0x4000)
    [ 3] 20304000  MOVI    R3, 16384 (0x4000)
    [ 4] 20404040  MOVI    R4, 16448 (0x4040)
    [ 5] 20504040  MOVI    R5, 16448 (0x4040)
    [ 6] 20604040  MOVI    R6, 16448 (0x4040)
    [ 7] 20704040  MOVI    R7, 16448 (0x4040)
    [ 8] 20803f80  MOVI    R8, 16256 (0x3f80)
    [ 9] 20903f80  MOVI    R9, 16256 (0x3f80)
    [10] 20a03f80  MOVI    R10, 16256 (0x3f80)
    [11] 20b03f80  MOVI    R11, 16256 (0x3f80)
    [12] ecc04800  WMMA.MMA  D=R12..15, A=R0..3, B=R4..7, C=R8..11
    [13] c8000000  RET
  [C000] PC=0 ir=00000000 dec=00000000 NOP      fv=0 lat=0 | fstl=0 sb=0 exb=0 sps=0 f
  [C001] PC=0 ir=20004000 dec=20004000 MOVI     fv=0 lat=0 | fstl=0 sb=0 exb=0 sps=0 f
  [C002] PC=1 ir=20004000 dec=20004000 MOVI     fv=1 lat=0 | fstl=0 sb=0 exb=0 sps=0 f
  [C003] PC=2 ir=20104000 dec=20104000 MOVI     fv=1 lat=0 | fstl=0 sb=0 exb=0 sps=0 f
```

```
[C004] PC=3 ir=20204000 dec=20204000 MOVI     fv=1 lat=0 | fstl=0 sb=0 exb=0 sps=0 f
[C005] PC=4 ir=20304000 dec=20304000 MOVI     fv=1 lat=0 | fstl=0 sb=0 exb=0 sps=0 f
[C006] PC=5 ir=20404040 dec=20404040 MOVI     fv=1 lat=0 | fstl=0 sb=0 exb=0 sps=0 f
[C007] PC=6 ir=20504040 dec=20504040 MOVI     fv=1 lat=0 | fstl=0 sb=0 exb=0 sps=0 f
[C008] PC=7 ir=20604040 dec=20604040 MOVI     fv=1 lat=0 | fstl=0 sb=0 exb=0 sps=0 f
[C009] PC=8 ir=20704040 dec=20704040 MOVI     fv=1 lat=0 | fstl=0 sb=0 exb=0 sps=0 f
[C010] PC=9 ir=20803f80 dec=20803f80 MOVI     fv=1 lat=0 | fstl=0 sb=0 exb=0 sps=0 f
[C011] PC=10 ir=20903f80 dec=20903f80 MOVI     fv=1 lat=0 | fstl=0 sb=0 exb=0 sps=0
[C012] PC=11 ir=20a03f80 dec=20a03f80 MOVI     fv=1 lat=0 | fstl=0 sb=0 exb=0 sps=0
[C013] PC=12 ir=20b03f80 dec=20b03f80 MOVI     fv=1 lat=0 | fstl=0 sb=0 exb=0 sps=0
[C014] PC=13 ir=ecc04800 dec=ecc04800 WMMA.MMA fv=1 lat=0 | fstl=1 sb=0 exb=0 sps=0
[C015] PC=13 ir=c8000000 dec=ecc04800 WMMA.MMA fv=1 lat=1 | fstl=1 sb=0 exb=0 sps=0
[C016] PC=13 ir=c8000000 dec=ecc04800 WMMA.MMA fv=1 lat=1 | fstl=1 sb=0 exb=0 sps=0
[C017] PC=13 ir=c8000000 dec=ecc04800 WMMA.MMA fv=1 lat=1 | fstl=0 sb=0 exb=0 sps=0
[C018] PC=14 ir=c8000000 dec=c8000000 RET      fv=1 lat=0 | fstl=1 sb=0 exb=0 sps=1
[C019] PC=14 ir=00000000 dec=c8000000 RET      fv=1 lat=1 | fstl=1 sb=0 exb=0 sps=1
[C020] PC=14 ir=00000000 dec=c8000000 RET      fv=1 lat=1 | fstl=1 sb=0 exb=0 sps=1
[C021] PC=14 ir=00000000 dec=c8000000 RET      fv=1 lat=1 | fstl=1 sb=0 exb=0 sps=1
[C022] PC=14 ir=00000000 dec=c8000000 RET      fv=1 lat=1 | fstl=1 sb=0 exb=0 sps=1
[C023] PC=14 ir=00000000 dec=c8000000 RET      fv=1 lat=1 | fstl=1 sb=0 exb=0 sps=1
[C024] PC=14 ir=00000000 dec=c8000000 RET      fv=1 lat=1 | fstl=1 sb=0 exb=0 sps=1
[C025] PC=14 ir=00000000 dec=c8000000 RET      fv=1 lat=1 | fstl=1 sb=0 exb=0 sps=1
[C026] PC=14 ir=00000000 dec=c8000000 RET      fv=1 lat=1 | fstl=1 sb=0 exb=0 sps=1
[C027] PC=14 ir=00000000 dec=c8000000 RET      fv=1 lat=1 | fstl=1 sb=0 exb=0 sps=1
[C028] PC=14 ir=00000000 dec=c8000000 RET      fv=1 lat=1 | fstl=1 sb=0 exb=0 sps=1
[C029] PC=14 ir=00000000 dec=c8000000 RET      fv=1 lat=1 | fstl=1 sb=0 exb=0 sps=1
[C030] PC=14 ir=00000000 dec=c8000000 RET      fv=1 lat=1 | fstl=1 sb=0 exb=0 sps=1
[C031] PC=14 ir=00000000 dec=c8000000 RET      fv=1 lat=1 | fstl=1 sb=0 exb=0 sps=1
[C032] PC=14 ir=00000000 dec=c8000000 RET      fv=1 lat=1 | fstl=1 sb=0 exb=0 sps=1
[C033] PC=14 ir=00000000 dec=c8000000 RET      fv=1 lat=1 | fstl=1 sb=0 exb=0 sps=1
[C034] PC=14 ir=00000000 dec=c8000000 RET      fv=1 lat=1 | fstl=1 sb=0 exb=0 sps=1
[C035] PC=14 ir=00000000 dec=c8000000 RET      fv=1 lat=1 | fstl=1 sb=0 exb=0 sps=1
[C036] PC=14 ir=00000000 dec=c8000000 RET      fv=1 lat=1 | fstl=1 sb=0 exb=0 sps=1
[C037] PC=14 ir=00000000 dec=c8000000 RET      fv=1 lat=1 | fstl=1 sb=0 exb=0 sps=1
[C038] PC=14 ir=00000000 dec=c8000000 RET      fv=1 lat=1 | fstl=1 sb=0 exb=0 sps=1
[C039] PC=14 ir=00000000 dec=c8000000 RET      fv=1 lat=1 | fstl=1 sb=0 exb=0 sps=1
[C040] PC=14 ir=00000000 dec=c8000000 RET      fv=1 lat=1 | fstl=1 sb=0 exb=0 sps=1
[C041] PC=14 ir=00000000 dec=c8000000 RET      fv=1 lat=1 | fstl=1 sb=0 exb=0 sps=1
[C042] PC=14 ir=00000000 dec=c8000000 RET      fv=1 lat=1 | fstl=1 sb=0 exb=0 sps=1
[C043] PC=14 ir=00000000 dec=c8000000 RET      fv=1 lat=1 | fstl=1 sb=0 exb=0 sps=1
[C044] PC=14 ir=00000000 dec=c8000000 RET      fv=1 lat=1 | fstl=1 sb=0 exb=0 sps=1
[C045] PC=14 ir=00000000 dec=c8000000 RET      fv=1 lat=1 | fstl=1 sb=0 exb=0 sps=1
[C046] PC=14 ir=00000000 dec=c8000000 RET      fv=1 lat=1 | fstl=1 sb=0 exb=0 sps=1
[C047] PC=14 ir=00000000 dec=c8000000 RET      fv=1 lat=1 | fstl=1 sb=0 exb=0 sps=1
[C048] PC=14 ir=00000000 dec=c8000000 RET      fv=1 lat=1 | fstl=1 sb=0 exb=0 sps=1
[C049] PC=14 ir=00000000 dec=c8000000 RET      fv=1 lat=1 | fstl=1 sb=0 exb=0 sps=1
[C050] PC=14 ir=00000000 dec=c8000000 RET      fv=1 lat=1 | fstl=1 sb=0 exb=0 sps=1
[C051] PC=14 ir=00000000 dec=c8000000 RET      fv=1 lat=1 | fstl=1 sb=0 exb=0 sps=1
[C052] PC=14 ir=00000000 dec=c8000000 RET      fv=1 lat=1 | fstl=1 sb=0 exb=0 sps=1
[C053] PC=14 ir=00000000 dec=c8000000 RET      fv=1 lat=1 | fstl=1 sb=0 exb=0 sps=1
[C054] PC=14 ir=00000000 dec=c8000000 RET      fv=1 lat=1 | fstl=1 sb=0 exb=0 sps=1
[C055] PC=14 ir=00000000 dec=c8000000 RET      fv=1 lat=1 | fstl=1 sb=0 exb=0 sps=1
[C056] PC=14 ir=00000000 dec=c8000000 RET      fv=1 lat=1 | fstl=1 sb=0 exb=0 sps=1
[C057] PC=14 ir=00000000 dec=c8000000 RET      fv=1 lat=1 | fstl=1 sb=0 exb=0 sps=1
[C058] PC=14 ir=00000000 dec=c8000000 RET      fv=1 lat=1 | fstl=1 sb=0 exb=0 sps=1
```

```
  [C059] PC=14 ir=00000000 dec=c8000000 RET      fv=1 lat=1 | fstl=1 sb=0 exb=0 sps=1
  [C060] PC=14 ir=00000000 dec=c8000000 RET      fv=1 lat=1 | fstl=1 sb=0 exb=0 sps=1
  [C061] PC=14 ir=00000000 dec=c8000000 RET      fv=1 lat=1 | fstl=0 sb=0 exb=0 sps=0
  [C062] PC=14 ir=00000000 dec=00000000 NOP      fv=0 lat=0 | fstl=0 sb=0 exb=0 sps=0
  [C063] PC=14 ir=00000000 dec=00000000 NOP      fv=0 lat=0 | fstl=0 sb=0 exb=0 sps=0
  [C064] PC=14 ir=00000000 dec=00000000 NOP      fv=0 lat=0 | fstl=0 sb=0 exb=0 sps=0
  [C065] PC=14 ir=00000000 dec=00000000 NOP      fv=0 lat=0 | fstl=0 sb=0 exb=0 sps=0
  Post-exec RF dump:
  RF dump       R0     R1     R2     R3     R4     R5     R6     R7     R8     R9
       SP0:   4000  4000  4000  4000  4040  4040  4040  4040  3f80  3f80  3f80  3f80
       SP1:   4000  4000  4000  4000  4040  4040  4040  4040  3f80  3f80  3f80  3f80
       SP2:   4000  4000  4000  4000  4040  4040  4040  4040  3f80  3f80  3f80  3f80
       SP3:   4000  4000  4000  4000  4040  4040  4040  4040  3f80  3f80  3f80  3f80
[PASS] T177: K17 D[i][0]=25.0  SP0.R12 = 0x41c8
[PASS] T178: K17 D[i][0]=25.0  SP1.R12 = 0x41c8
[PASS] T179: K17 D[i][0]=25.0  SP2.R12 = 0x41c8
[PASS] T180: K17 D[i][0]=25.0  SP3.R12 = 0x41c8
[PASS] T181: K17 D[i][1]=25.0  SP0.R13 = 0x41c8
[PASS] T182: K17 D[i][1]=25.0  SP1.R13 = 0x41c8
[PASS] T183: K17 D[i][1]=25.0  SP2.R13 = 0x41c8
[PASS] T184: K17 D[i][1]=25.0  SP3.R13 = 0x41c8
[PASS] T185: K17 D[i][2]=25.0  SP0.R14 = 0x41c8
[PASS] T186: K17 D[i][2]=25.0  SP1.R14 = 0x41c8
[PASS] T187: K17 D[i][2]=25.0  SP2.R14 = 0x41c8
[PASS] T188: K17 D[i][2]=25.0  SP3.R14 = 0x41c8
[PASS] T189: K17 D[i][3]=25.0  SP0.R15 = 0x41c8
[PASS] T190: K17 D[i][3]=25.0  SP1.R15 = 0x41c8
[PASS] T191: K17 D[i][3]=25.0  SP2.R15 = 0x41c8
[PASS] T192: K17 D[i][3]=25.0  SP3.R15 = 0x41c8

--- K18: WMMA full pipeline LOAD->MMA->STORE ---
  DMEM pre-load: A=I(4x4) @200, B=2.0*ones @204, C=0 @208
  Computation: D = I*2*ones + 0 = 2*ones => all 2.0 (0x4000)
  Program listing:
    [ 0] 200000c8  MOVI    R0, 200 (0x00c8)
    [ 1] f0400000  WMMA.LOAD R4..7, [R0 + 0]
    [ 2] f0800004  WMMA.LOAD R8..11, [R0 + 4]
    [ 3] 00000000  NOP
    [ 4] 00000000  NOP
    [ 5] 00000000  NOP
    [ 6] 00000000  NOP
    [ 7] 20000000  MOVI    R0, 0 (0x0000)
    [ 8] 20100000  MOVI    R1, 0 (0x0000)
    [ 9] 20200000  MOVI    R2, 0 (0x0000)
    [10] 20300000  MOVI    R3, 0 (0x0000)
    [11] ecc48000  WMMA.MMA  D=R12..15, A=R4..7, B=R8..11, C=R0..3
    [12] 00000000  NOP
    [13] 00000000  NOP
    [14] 00000000  NOP
    [15] 00000000  NOP
    [16] 2000012c  MOVI    R0, 300 (0x012c)
    [17] f8c00000  WMMA.STORE R12..15, [R0 + 0]
    [18] c8000000  RET
  [C000] PC=0 ir=00000000 dec=00000000 NOP      fv=0 lat=0 | fstl=0 sb=0 exb=0 sps=0 f
  [C001] PC=0 ir=200000c8 dec=200000c8 MOVI     fv=0 lat=0 | fstl=0 sb=0 exb=0 sps=0 f
```

```
[C002] PC=1 ir=200000c8 dec=200000c8 MOVI     fv=1 lat=0 | fstl=0 sb=0 exb=0 sps=0 f
[C003] PC=2 ir=f0400000 dec=f0400000 WMMA.LD  fv=1 lat=0 | fstl=1 sb=1 exb=0 sps=0 f
[C004] PC=2 ir=f0800004 dec=f0400000 WMMA.LD  fv=1 lat=1 | fstl=1 sb=1 exb=0 sps=0 f
[C005] PC=2 ir=f0800004 dec=f0400000 WMMA.LD  fv=1 lat=1 | fstl=1 sb=0 exb=0 sps=0 f
[C006] PC=2 ir=f0800004 dec=f0400000 WMMA.LD  fv=1 lat=1 | fstl=0 sb=0 exb=0 sps=0 f
[C007] PC=3 ir=f0800004 dec=f0800004 WMMA.LD  fv=1 lat=0 | fstl=1 sb=0 exb=0 sps=1 f
[C008] PC=3 ir=00000000 dec=f0800004 WMMA.LD  fv=1 lat=1 | fstl=1 sb=0 exb=0 sps=1 f
[C009] PC=3 ir=00000000 dec=f0800004 WMMA.LD  fv=1 lat=1 | fstl=1 sb=0 exb=0 sps=1 f
[C010] PC=3 ir=00000000 dec=f0800004 WMMA.LD  fv=1 lat=1 | fstl=1 sb=0 exb=0 sps=1 f
[C011] PC=3 ir=00000000 dec=f0800004 WMMA.LD  fv=1 lat=1 | fstl=1 sb=0 exb=0 sps=1 f
[C012] PC=3 ir=00000000 dec=f0800004 WMMA.LD  fv=1 lat=1 | fstl=0 sb=0 exb=0 sps=0 f
[C013] PC=4 ir=00000000 dec=00000000 NOP      fv=1 lat=0 | fstl=1 sb=0 exb=0 sps=1 f
[C014] PC=4 ir=00000000 dec=00000000 NOP      fv=1 lat=1 | fstl=1 sb=0 exb=0 sps=1 f
[C015] PC=4 ir=00000000 dec=00000000 NOP      fv=1 lat=1 | fstl=1 sb=0 exb=0 sps=1 f
[C016] PC=4 ir=00000000 dec=00000000 NOP      fv=1 lat=1 | fstl=1 sb=0 exb=0 sps=1 f
[C017] PC=4 ir=00000000 dec=00000000 NOP      fv=1 lat=1 | fstl=1 sb=0 exb=0 sps=1 f
[C018] PC=4 ir=00000000 dec=00000000 NOP      fv=1 lat=1 | fstl=0 sb=0 exb=0 sps=0 f
[C019] PC=5 ir=00000000 dec=00000000 NOP      fv=1 lat=0 | fstl=0 sb=0 exb=0 sps=0 f
[C020] PC=6 ir=00000000 dec=00000000 NOP      fv=1 lat=0 | fstl=0 sb=0 exb=0 sps=0 f
[C021] PC=7 ir=00000000 dec=00000000 NOP      fv=1 lat=0 | fstl=0 sb=0 exb=0 sps=0 f
[C022] PC=8 ir=20000000 dec=20000000 MOVI     fv=1 lat=0 | fstl=0 sb=0 exb=0 sps=0 f
[C023] PC=9 ir=20100000 dec=20100000 MOVI     fv=1 lat=0 | fstl=0 sb=0 exb=0 sps=0 f
[C024] PC=10 ir=20200000 dec=20200000 MOVI     fv=1 lat=0 | fstl=0 sb=0 exb=0 sps=0
[C025] PC=11 ir=20300000 dec=20300000 MOVI     fv=1 lat=0 | fstl=0 sb=0 exb=0 sps=0
[C026] PC=12 ir=ecc48000 dec=ecc48000 WMMA.MMA fv=1 lat=0 | fstl=1 sb=0 exb=0 sps=0
[C027] PC=12 ir=00000000 dec=ecc48000 WMMA.MMA fv=1 lat=1 | fstl=1 sb=0 exb=0 sps=0
[C028] PC=12 ir=00000000 dec=ecc48000 WMMA.MMA fv=1 lat=1 | fstl=1 sb=0 exb=0 sps=0
[C029] PC=12 ir=00000000 dec=ecc48000 WMMA.MMA fv=1 lat=1 | fstl=0 sb=0 exb=0 sps=0
[C030] PC=13 ir=00000000 dec=00000000 NOP      fv=1 lat=0 | fstl=1 sb=0 exb=0 sps=1
[C031] PC=13 ir=00000000 dec=00000000 NOP      fv=1 lat=1 | fstl=1 sb=0 exb=0 sps=1
[C032] PC=13 ir=00000000 dec=00000000 NOP      fv=1 lat=1 | fstl=1 sb=0 exb=0 sps=1
[C033] PC=13 ir=00000000 dec=00000000 NOP      fv=1 lat=1 | fstl=1 sb=0 exb=0 sps=1
[C034] PC=13 ir=00000000 dec=00000000 NOP      fv=1 lat=1 | fstl=1 sb=0 exb=0 sps=1
[C035] PC=13 ir=00000000 dec=00000000 NOP      fv=1 lat=1 | fstl=1 sb=0 exb=0 sps=1
[C036] PC=13 ir=00000000 dec=00000000 NOP      fv=1 lat=1 | fstl=1 sb=0 exb=0 sps=1
[C037] PC=13 ir=00000000 dec=00000000 NOP      fv=1 lat=1 | fstl=1 sb=0 exb=0 sps=1
[C038] PC=13 ir=00000000 dec=00000000 NOP      fv=1 lat=1 | fstl=1 sb=0 exb=0 sps=1
[C039] PC=13 ir=00000000 dec=00000000 NOP      fv=1 lat=1 | fstl=1 sb=0 exb=0 sps=1
[C040] PC=13 ir=00000000 dec=00000000 NOP      fv=1 lat=1 | fstl=1 sb=0 exb=0 sps=1
[C041] PC=13 ir=00000000 dec=00000000 NOP      fv=1 lat=1 | fstl=1 sb=0 exb=0 sps=1
[C042] PC=13 ir=00000000 dec=00000000 NOP      fv=1 lat=1 | fstl=1 sb=0 exb=0 sps=1
[C043] PC=13 ir=00000000 dec=00000000 NOP      fv=1 lat=1 | fstl=1 sb=0 exb=0 sps=1
[C044] PC=13 ir=00000000 dec=00000000 NOP      fv=1 lat=1 | fstl=1 sb=0 exb=0 sps=1
[C045] PC=13 ir=00000000 dec=00000000 NOP      fv=1 lat=1 | fstl=1 sb=0 exb=0 sps=1
[C046] PC=13 ir=00000000 dec=00000000 NOP      fv=1 lat=1 | fstl=1 sb=0 exb=0 sps=1
[C047] PC=13 ir=00000000 dec=00000000 NOP      fv=1 lat=1 | fstl=1 sb=0 exb=0 sps=1
[C048] PC=13 ir=00000000 dec=00000000 NOP      fv=1 lat=1 | fstl=1 sb=0 exb=0 sps=1
[C049] PC=13 ir=00000000 dec=00000000 NOP      fv=1 lat=1 | fstl=1 sb=0 exb=0 sps=1
[C050] PC=13 ir=00000000 dec=00000000 NOP      fv=1 lat=1 | fstl=1 sb=0 exb=0 sps=1
[C051] PC=13 ir=00000000 dec=00000000 NOP      fv=1 lat=1 | fstl=1 sb=0 exb=0 sps=1
[C052] PC=13 ir=00000000 dec=00000000 NOP      fv=1 lat=1 | fstl=1 sb=0 exb=0 sps=1
[C053] PC=13 ir=00000000 dec=00000000 NOP      fv=1 lat=1 | fstl=1 sb=0 exb=0 sps=1
[C054] PC=13 ir=00000000 dec=00000000 NOP      fv=1 lat=1 | fstl=1 sb=0 exb=0 sps=1
[C055] PC=13 ir=00000000 dec=00000000 NOP      fv=1 lat=1 | fstl=1 sb=0 exb=0 sps=1
[C056] PC=13 ir=00000000 dec=00000000 NOP      fv=1 lat=1 | fstl=1 sb=0 exb=0 sps=1
```

```
  [C057] PC=13 ir=00000000 dec=00000000 NOP      fv=1 lat=1 | fstl=1 sb=0 exb=0 sps=1
  [C058] PC=13 ir=00000000 dec=00000000 NOP      fv=1 lat=1 | fstl=1 sb=0 exb=0 sps=1
  [C059] PC=13 ir=00000000 dec=00000000 NOP      fv=1 lat=1 | fstl=1 sb=0 exb=0 sps=1
  [C060] PC=13 ir=00000000 dec=00000000 NOP      fv=1 lat=1 | fstl=1 sb=0 exb=0 sps=1
  [C061] PC=13 ir=00000000 dec=00000000 NOP      fv=1 lat=1 | fstl=1 sb=0 exb=0 sps=1
  [C062] PC=13 ir=00000000 dec=00000000 NOP      fv=1 lat=1 | fstl=1 sb=0 exb=0 sps=1
  [C063] PC=13 ir=00000000 dec=00000000 NOP      fv=1 lat=1 | fstl=1 sb=0 exb=0 sps=1
  [C064] PC=13 ir=00000000 dec=00000000 NOP      fv=1 lat=1 | fstl=1 sb=0 exb=0 sps=1
  [C065] PC=13 ir=00000000 dec=00000000 NOP      fv=1 lat=1 | fstl=1 sb=0 exb=0 sps=1
  [C066] PC=13 ir=00000000 dec=00000000 NOP      fv=1 lat=1 | fstl=1 sb=0 exb=0 sps=1
  [C067] PC=13 ir=00000000 dec=00000000 NOP      fv=1 lat=1 | fstl=1 sb=0 exb=0 sps=1
  [C068] PC=13 ir=00000000 dec=00000000 NOP      fv=1 lat=1 | fstl=1 sb=0 exb=0 sps=1
  [C069] PC=13 ir=00000000 dec=00000000 NOP      fv=1 lat=1 | fstl=1 sb=0 exb=0 sps=1
  [C070] PC=13 ir=00000000 dec=00000000 NOP      fv=1 lat=1 | fstl=1 sb=0 exb=0 sps=1
  [C071] PC=13 ir=00000000 dec=00000000 NOP      fv=1 lat=1 | fstl=1 sb=0 exb=0 sps=1
  [C072] PC=13 ir=00000000 dec=00000000 NOP      fv=1 lat=1 | fstl=1 sb=0 exb=0 sps=1
  [C073] PC=13 ir=00000000 dec=00000000 NOP      fv=1 lat=1 | fstl=0 sb=0 exb=0 sps=0
  [C074] PC=14 ir=00000000 dec=00000000 NOP      fv=1 lat=0 | fstl=0 sb=0 exb=0 sps=0
  [C075] PC=15 ir=00000000 dec=00000000 NOP      fv=1 lat=0 | fstl=0 sb=0 exb=0 sps=0
  [C076] PC=16 ir=00000000 dec=00000000 NOP      fv=1 lat=0 | fstl=0 sb=0 exb=0 sps=0
  [C077] PC=17 ir=2000012c dec=2000012c MOVI     fv=1 lat=0 | fstl=0 sb=0 exb=0 sps=0
  [C078] PC=18 ir=f8c00000 dec=f8c00000 WMMA.ST  fv=1 lat=0 | fstl=1 sb=1 exb=0 sps=0
  [C079] PC=18 ir=c8000000 dec=f8c00000 WMMA.ST  fv=1 lat=1 | fstl=1 sb=1 exb=0 sps=0
  [C080] PC=18 ir=c8000000 dec=f8c00000 WMMA.ST  fv=1 lat=1 | fstl=1 sb=0 exb=0 sps=0
  [C081] PC=18 ir=c8000000 dec=f8c00000 WMMA.ST  fv=1 lat=1 | fstl=0 sb=0 exb=0 sps=0
  [C082] PC=19 ir=c8000000 dec=c8000000 RET      fv=1 lat=0 | fstl=1 sb=0 exb=0 sps=1
  [C083] PC=19 ir=00000000 dec=c8000000 RET      fv=1 lat=1 | fstl=1 sb=0 exb=0 sps=1
  [C084] PC=19 ir=00000000 dec=c8000000 RET      fv=1 lat=1 | fstl=1 sb=0 exb=0 sps=1
  [C085] PC=19 ir=00000000 dec=c8000000 RET      fv=1 lat=1 | fstl=1 sb=0 exb=0 sps=1
  [C086] PC=19 ir=00000000 dec=c8000000 RET      fv=1 lat=1 | fstl=1 sb=0 exb=0 sps=1
  [C087] PC=19 ir=00000000 dec=c8000000 RET      fv=1 lat=1 | fstl=0 sb=0 exb=0 sps=0
  [C088] PC=19 ir=00000000 dec=00000000 NOP      fv=0 lat=0 | fstl=0 sb=0 exb=0 sps=0
  [C089] PC=19 ir=00000000 dec=00000000 NOP      fv=0 lat=0 | fstl=0 sb=0 exb=0 sps=0
  [C090] PC=19 ir=00000000 dec=00000000 NOP      fv=0 lat=0 | fstl=0 sb=0 exb=0 sps=0
  [C091] PC=19 ir=00000000 dec=00000000 NOP      fv=0 lat=0 | fstl=0 sb=0 exb=0 sps=0
  Post-exec RF dump:
  RF dump       R0     R1     R2     R3     R4     R5     R6     R7     R8     R9
       SP0:   012c  0000  0000  0000  3f80  0000  0000  0000  4000  4000  4000  4000
       SP1:   012c  0000  0000  0000  0000  3f80  0000  0000  4000  4000  4000  4000
       SP2:   012c  0000  0000  0000  0000  0000  3f80  0000  4000  4000  4000  4000
       SP3:   012c  0000  0000  0000  0000  0000  0000  3f80  4000  4000  4000  4000
[PASS] T193: K18 D[i][0]=2.0  SP0.R12 = 0x4000
[PASS] T194: K18 D[i][0]=2.0  SP1.R12 = 0x4000
[PASS] T195: K18 D[i][0]=2.0  SP2.R12 = 0x4000
[PASS] T196: K18 D[i][0]=2.0  SP3.R12 = 0x4000
[PASS] T197: K18 D[i][1]=2.0  SP0.R13 = 0x4000
[PASS] T198: K18 D[i][1]=2.0  SP1.R13 = 0x4000
[PASS] T199: K18 D[i][1]=2.0  SP2.R13 = 0x4000
[PASS] T200: K18 D[i][1]=2.0  SP3.R13 = 0x4000
[PASS] T201: K18 D[i][2]=2.0  SP0.R14 = 0x4000
[PASS] T202: K18 D[i][2]=2.0  SP1.R14 = 0x4000
[PASS] T203: K18 D[i][2]=2.0  SP2.R14 = 0x4000
[PASS] T204: K18 D[i][2]=2.0  SP3.R14 = 0x4000
[PASS] T205: K18 D[i][3]=2.0  SP0.R15 = 0x4000
[PASS] T206: K18 D[i][3]=2.0  SP1.R15 = 0x4000
```

```
[PASS] T207: K18 D[i][3]=2.0  SP2.R15 = 0x4000
[PASS] T208: K18 D[i][3]=2.0  SP3.R15 = 0x4000
[PASS] T209: K18 DMEM[300]=2.0  SP0.DMEM[300] = 0x4000
[PASS] T210: K18 DMEM[300]=2.0  SP1.DMEM[300] = 0x4000
[PASS] T211: K18 DMEM[300]=2.0  SP2.DMEM[300] = 0x4000
[PASS] T212: K18 DMEM[300]=2.0  SP3.DMEM[300] = 0x4000
[PASS] T213: K18 DMEM[301]=2.0  SP0.DMEM[301] = 0x4000
[PASS] T214: K18 DMEM[301]=2.0  SP1.DMEM[301] = 0x4000
[PASS] T215: K18 DMEM[301]=2.0  SP2.DMEM[301] = 0x4000
[PASS] T216: K18 DMEM[301]=2.0  SP3.DMEM[301] = 0x4000
[PASS] T217: K18 DMEM[302]=2.0  SP0.DMEM[302] = 0x4000
[PASS] T218: K18 DMEM[302]=2.0  SP1.DMEM[302] = 0x4000
[PASS] T219: K18 DMEM[302]=2.0  SP2.DMEM[302] = 0x4000
[PASS] T220: K18 DMEM[302]=2.0  SP3.DMEM[302] = 0x4000
[PASS] T221: K18 DMEM[303]=2.0  SP0.DMEM[303] = 0x4000
[PASS] T222: K18 DMEM[303]=2.0  SP1.DMEM[303] = 0x4000
[PASS] T223: K18 DMEM[303]=2.0  SP2.DMEM[303] = 0x4000
[PASS] T224: K18 DMEM[303]=2.0  SP3.DMEM[303] = 0x4000

--- K19: MMA zero passthrough 0*3+5=5.0 ---
  Computation: D = 0*3 + 5 = 5.0 (accumulate passthrough)
  Program listing:
    [ 0] 20404040  MOVI    R4, 16448 (0x4040)
    [ 1] 20504040  MOVI    R5, 16448 (0x4040)
    [ 2] 20604040  MOVI    R6, 16448 (0x4040)
    [ 3] 20704040  MOVI    R7, 16448 (0x4040)
    [ 4] 208040a0  MOVI    R8, 16544 (0x40a0)
    [ 5] 209040a0  MOVI    R9, 16544 (0x40a0)
    [ 6] 20a040a0  MOVI    R10, 16544 (0x40a0)
    [ 7] 20b040a0  MOVI    R11, 16544 (0x40a0)
    [ 8] ecc04800  WMMA.MMA  D=R12..15, A=R0..3, B=R4..7, C=R8..11
    [ 9] c8000000  RET
  RF dump       R0     R1     R2     R3     R4     R5     R6     R7     R8     R9
       SP0:   0000  0000  0000  0000  4040  4040  4040  4040  40a0  40a0  40a0  40a0
       SP1:   0000  0000  0000  0000  4040  4040  4040  4040  40a0  40a0  40a0  40a0
       SP2:   0000  0000  0000  0000  4040  4040  4040  4040  40a0  40a0  40a0  40a0
       SP3:   0000  0000  0000  0000  4040  4040  4040  4040  40a0  40a0  40a0  40a0
[PASS] T225: K19 D[i][0]=5.0  SP0.R12 = 0x40a0
[PASS] T226: K19 D[i][0]=5.0  SP1.R12 = 0x40a0
[PASS] T227: K19 D[i][0]=5.0  SP2.R12 = 0x40a0
[PASS] T228: K19 D[i][0]=5.0  SP3.R12 = 0x40a0
[PASS] T229: K19 D[i][1]=5.0  SP0.R13 = 0x40a0
[PASS] T230: K19 D[i][1]=5.0  SP1.R13 = 0x40a0
[PASS] T231: K19 D[i][1]=5.0  SP2.R13 = 0x40a0
[PASS] T232: K19 D[i][1]=5.0  SP3.R13 = 0x40a0
[PASS] T233: K19 D[i][2]=5.0  SP0.R14 = 0x40a0
[PASS] T234: K19 D[i][2]=5.0  SP1.R14 = 0x40a0
[PASS] T235: K19 D[i][2]=5.0  SP2.R14 = 0x40a0
[PASS] T236: K19 D[i][2]=5.0  SP3.R14 = 0x40a0
[PASS] T237: K19 D[i][3]=5.0  SP0.R15 = 0x40a0
[PASS] T238: K19 D[i][3]=5.0  SP1.R15 = 0x40a0
[PASS] T239: K19 D[i][3]=5.0  SP2.R15 = 0x40a0
[PASS] T240: K19 D[i][3]=5.0  SP3.R15 = 0x40a0

--- K20: MMA negative -1*2+0=-8.0 ---
```

```
  Computation: D = 4*(-1*2) + 0 = -8.0
  Program listing:
    [ 0] 2000bf80  MOVI    R0, 49024 (0xbf80)
    [ 1] 2010bf80  MOVI    R1, 49024 (0xbf80)
    [ 2] 2020bf80  MOVI    R2, 49024 (0xbf80)
    [ 3] 2030bf80  MOVI    R3, 49024 (0xbf80)
    [ 4] 20404000  MOVI    R4, 16384 (0x4000)
    [ 5] 20504000  MOVI    R5, 16384 (0x4000)
    [ 6] 20604000  MOVI    R6, 16384 (0x4000)
    [ 7] 20704000  MOVI    R7, 16384 (0x4000)
    [ 8] ecc04800  WMMA.MMA  D=R12..15, A=R0..3, B=R4..7, C=R8..11
    [ 9] c8000000  RET
  RF dump       R0     R1     R2     R3     R4     R5     R6     R7     R8     R9
       SP0:   bf80  bf80  bf80  bf80  4000  4000  4000  4000  0000  0000  0000  0000
       SP1:   bf80  bf80  bf80  bf80  4000  4000  4000  4000  0000  0000  0000  0000
       SP2:   bf80  bf80  bf80  bf80  4000  4000  4000  4000  0000  0000  0000  0000
       SP3:   bf80  bf80  bf80  bf80  4000  4000  4000  4000  0000  0000  0000  0000
[PASS] T241: K20 D[i][0]=-8.0  SP0.R12 = 0xc100
[PASS] T242: K20 D[i][0]=-8.0  SP1.R12 = 0xc100
[PASS] T243: K20 D[i][0]=-8.0  SP2.R12 = 0xc100
[PASS] T244: K20 D[i][0]=-8.0  SP3.R12 = 0xc100
[PASS] T245: K20 D[i][1]=-8.0  SP0.R13 = 0xc100
[PASS] T246: K20 D[i][1]=-8.0  SP1.R13 = 0xc100
[PASS] T247: K20 D[i][1]=-8.0  SP2.R13 = 0xc100
[PASS] T248: K20 D[i][1]=-8.0  SP3.R13 = 0xc100
[PASS] T249: K20 D[i][2]=-8.0  SP0.R14 = 0xc100
[PASS] T250: K20 D[i][2]=-8.0  SP1.R14 = 0xc100
[PASS] T251: K20 D[i][2]=-8.0  SP2.R14 = 0xc100
[PASS] T252: K20 D[i][2]=-8.0  SP3.R14 = 0xc100
[PASS] T253: K20 D[i][3]=-8.0  SP0.R15 = 0xc100
[PASS] T254: K20 D[i][3]=-8.0  SP1.R15 = 0xc100
[PASS] T255: K20 D[i][3]=-8.0  SP2.R15 = 0xc100
[PASS] T256: K20 D[i][3]=-8.0  SP3.R15 = 0xc100

--- K21: MMA mixed 1*1+(-2)=2.0 ---
  Computation: D = 4*(1*1) + (-2) = 4 - 2 = 2.0
  Program listing:
    [ 0] 20003f80  MOVI    R0, 16256 (0x3f80)
    [ 1] 20103f80  MOVI    R1, 16256 (0x3f80)
    [ 2] 20203f80  MOVI    R2, 16256 (0x3f80)
    [ 3] 20303f80  MOVI    R3, 16256 (0x3f80)
    [ 4] 20403f80  MOVI    R4, 16256 (0x3f80)
    [ 5] 20503f80  MOVI    R5, 16256 (0x3f80)
    [ 6] 20603f80  MOVI    R6, 16256 (0x3f80)
    [ 7] 20703f80  MOVI    R7, 16256 (0x3f80)
    [ 8] 2080c000  MOVI    R8, 49152 (0xc000)
    [ 9] 2090c000  MOVI    R9, 49152 (0xc000)
    [10] 20a0c000  MOVI    R10, 49152 (0xc000)
    [11] 20b0c000  MOVI    R11, 49152 (0xc000)
    [12] ecc04800  WMMA.MMA  D=R12..15, A=R0..3, B=R4..7, C=R8..11
    [13] c8000000  RET
  RF dump       R0     R1     R2     R3     R4     R5     R6     R7     R8     R9
       SP0:   3f80  3f80  3f80  3f80  3f80  3f80  3f80  3f80  c000  c000  c000  c000
       SP1:   3f80  3f80  3f80  3f80  3f80  3f80  3f80  3f80  c000  c000  c000  c000
       SP2:   3f80  3f80  3f80  3f80  3f80  3f80  3f80  3f80  c000  c000  c000  c000
```

```
       SP3:   3f80  3f80  3f80  3f80  3f80  3f80  3f80  3f80  c000  c000  c000  c000
[PASS] T257: K21 D[i][0]=2.0  SP0.R12 = 0x4000
[PASS] T258: K21 D[i][0]=2.0  SP1.R12 = 0x4000
[PASS] T259: K21 D[i][0]=2.0  SP2.R12 = 0x4000
[PASS] T260: K21 D[i][0]=2.0  SP3.R12 = 0x4000
[PASS] T261: K21 D[i][1]=2.0  SP0.R13 = 0x4000
[PASS] T262: K21 D[i][1]=2.0  SP1.R13 = 0x4000
[PASS] T263: K21 D[i][1]=2.0  SP2.R13 = 0x4000
[PASS] T264: K21 D[i][1]=2.0  SP3.R13 = 0x4000
[PASS] T265: K21 D[i][2]=2.0  SP0.R14 = 0x4000
[PASS] T266: K21 D[i][2]=2.0  SP1.R14 = 0x4000
[PASS] T267: K21 D[i][2]=2.0  SP2.R14 = 0x4000
[PASS] T268: K21 D[i][2]=2.0  SP3.R14 = 0x4000
[PASS] T269: K21 D[i][3]=2.0  SP0.R15 = 0x4000
[PASS] T270: K21 D[i][3]=2.0  SP1.R15 = 0x4000
[PASS] T271: K21 D[i][3]=2.0  SP2.R15 = 0x4000
[PASS] T272: K21 D[i][3]=2.0  SP3.R15 = 0x4000

--- K22: MMA fractional 0.5*0.5+0=1.0 ---
  Computation: D = 4*(0.5*0.5) + 0 = 1.0
  Program listing:
    [ 0] 20003f00  MOVI    R0, 16128 (0x3f00)
    [ 1] 20103f00  MOVI    R1, 16128 (0x3f00)
    [ 2] 20203f00  MOVI    R2, 16128 (0x3f00)
    [ 3] 20303f00  MOVI    R3, 16128 (0x3f00)
    [ 4] 20403f00  MOVI    R4, 16128 (0x3f00)
    [ 5] 20503f00  MOVI    R5, 16128 (0x3f00)
    [ 6] 20603f00  MOVI    R6, 16128 (0x3f00)
    [ 7] 20703f00  MOVI    R7, 16128 (0x3f00)
    [ 8] ecc04800  WMMA.MMA  D=R12..15, A=R0..3, B=R4..7, C=R8..11
    [ 9] c8000000  RET
  RF dump       R0     R1     R2     R3     R4     R5     R6     R7     R8     R9
       SP0:   3f00  3f00  3f00  3f00  3f00  3f00  3f00  3f00  0000  0000  0000  0000
       SP1:   3f00  3f00  3f00  3f00  3f00  3f00  3f00  3f00  0000  0000  0000  0000
       SP2:   3f00  3f00  3f00  3f00  3f00  3f00  3f00  3f00  0000  0000  0000  0000
       SP3:   3f00  3f00  3f00  3f00  3f00  3f00  3f00  3f00  0000  0000  0000  0000
[PASS] T273: K22 D[i][0]=1.0  SP0.R12 = 0x3f80
[PASS] T274: K22 D[i][0]=1.0  SP1.R12 = 0x3f80
[PASS] T275: K22 D[i][0]=1.0  SP2.R12 = 0x3f80
[PASS] T276: K22 D[i][0]=1.0  SP3.R12 = 0x3f80
[PASS] T277: K22 D[i][1]=1.0  SP0.R13 = 0x3f80
[PASS] T278: K22 D[i][1]=1.0  SP1.R13 = 0x3f80
[PASS] T279: K22 D[i][1]=1.0  SP2.R13 = 0x3f80
[PASS] T280: K22 D[i][1]=1.0  SP3.R13 = 0x3f80
[PASS] T281: K22 D[i][2]=1.0  SP0.R14 = 0x3f80
[PASS] T282: K22 D[i][2]=1.0  SP1.R14 = 0x3f80
[PASS] T283: K22 D[i][2]=1.0  SP2.R14 = 0x3f80
[PASS] T284: K22 D[i][2]=1.0  SP3.R14 = 0x3f80
[PASS] T285: K22 D[i][3]=1.0  SP0.R15 = 0x3f80
[PASS] T286: K22 D[i][3]=1.0  SP1.R15 = 0x3f80
[PASS] T287: K22 D[i][3]=1.0  SP2.R15 = 0x3f80
[PASS] T288: K22 D[i][3]=1.0  SP3.R15 = 0x3f80

--- K23: Chained MMA D1=4.0, D2=D1*1+0=16.0 ---
  Step 1: D1 = 4*(1*1)+0 = 4.0
```

```
  Step 2: D2 = 4*(4*1)+0 = 16.0 (chained)
  Program listing:
    [ 0] 20003f80  MOVI    R0, 16256 (0x3f80)
    [ 1] 20103f80  MOVI    R1, 16256 (0x3f80)
    [ 2] 20203f80  MOVI    R2, 16256 (0x3f80)
    [ 3] 20303f80  MOVI    R3, 16256 (0x3f80)
    [ 4] 20403f80  MOVI    R4, 16256 (0x3f80)
    [ 5] 20503f80  MOVI    R5, 16256 (0x3f80)
    [ 6] 20603f80  MOVI    R6, 16256 (0x3f80)
    [ 7] 20703f80  MOVI    R7, 16256 (0x3f80)
    [ 8] ecc04800  WMMA.MMA  D=R12..15, A=R0..3, B=R4..7, C=R8..11
    [ 9] ec0c4800  WMMA.MMA  D=R0..3, A=R12..15, B=R4..7, C=R8..11
    [10] c8000000  RET
  RF dump       R0     R1     R2     R3     R4     R5     R6     R7     R8     R9
       SP0:   4180  4180  4180  4180  3f80  3f80  3f80  3f80  0000  0000  0000  0000
       SP1:   4180  4180  4180  4180  3f80  3f80  3f80  3f80  0000  0000  0000  0000
       SP2:   4180  4180  4180  4180  3f80  3f80  3f80  3f80  0000  0000  0000  0000
       SP3:   4180  4180  4180  4180  3f80  3f80  3f80  3f80  0000  0000  0000  0000
[PASS] T289: K23 D1[i][0]=4.0  SP0.R12 = 0x4080
[PASS] T290: K23 D1[i][0]=4.0  SP1.R12 = 0x4080
[PASS] T291: K23 D1[i][0]=4.0  SP2.R12 = 0x4080
[PASS] T292: K23 D1[i][0]=4.0  SP3.R12 = 0x4080
[PASS] T293: K23 D1[i][1]=4.0  SP0.R13 = 0x4080
[PASS] T294: K23 D1[i][1]=4.0  SP1.R13 = 0x4080
[PASS] T295: K23 D1[i][1]=4.0  SP2.R13 = 0x4080
[PASS] T296: K23 D1[i][1]=4.0  SP3.R13 = 0x4080
[PASS] T297: K23 D1[i][2]=4.0  SP0.R14 = 0x4080
[PASS] T298: K23 D1[i][2]=4.0  SP1.R14 = 0x4080
[PASS] T299: K23 D1[i][2]=4.0  SP2.R14 = 0x4080
[PASS] T300: K23 D1[i][2]=4.0  SP3.R14 = 0x4080
[PASS] T301: K23 D1[i][3]=4.0  SP0.R15 = 0x4080
[PASS] T302: K23 D1[i][3]=4.0  SP1.R15 = 0x4080
[PASS] T303: K23 D1[i][3]=4.0  SP2.R15 = 0x4080
[PASS] T304: K23 D1[i][3]=4.0  SP3.R15 = 0x4080
[PASS] T305: K23 D2[i][0]=16.0  SP0.R0 = 0x4180
[PASS] T306: K23 D2[i][0]=16.0  SP1.R0 = 0x4180
[PASS] T307: K23 D2[i][0]=16.0  SP2.R0 = 0x4180
[PASS] T308: K23 D2[i][0]=16.0  SP3.R0 = 0x4180
[PASS] T309: K23 D2[i][1]=16.0  SP0.R1 = 0x4180
[PASS] T310: K23 D2[i][1]=16.0  SP1.R1 = 0x4180
[PASS] T311: K23 D2[i][1]=16.0  SP2.R1 = 0x4180
[PASS] T312: K23 D2[i][1]=16.0  SP3.R1 = 0x4180
[PASS] T313: K23 D2[i][2]=16.0  SP0.R2 = 0x4180
[PASS] T314: K23 D2[i][2]=16.0  SP1.R2 = 0x4180
[PASS] T315: K23 D2[i][2]=16.0  SP2.R2 = 0x4180
[PASS] T316: K23 D2[i][2]=16.0  SP3.R2 = 0x4180
[PASS] T317: K23 D2[i][3]=16.0  SP0.R3 = 0x4180
[PASS] T318: K23 D2[i][3]=16.0  SP1.R3 = 0x4180
[PASS] T319: K23 D2[i][3]=16.0  SP2.R3 = 0x4180
[PASS] T320: K23 D2[i][3]=16.0  SP3.R3 = 0x4180

--- K24: Per-thread SIMT diag(2)*3+1=7.0 ---
  DMEM pre-load: A=diag(2.0) @100 (per-SP rows)
  Computation: D = diag(2)*3*ones + ones = 7*ones
  Program listing:
```

```
    [ 0] 20000064  MOVI    R0, 100 (0x0064)
    [ 1] f0000000  WMMA.LOAD R0..3, [R0 + 0]
    [ 2] 20404040  MOVI    R4, 16448 (0x4040)
    [ 3] 20504040  MOVI    R5, 16448 (0x4040)
    [ 4] 20604040  MOVI    R6, 16448 (0x4040)
    [ 5] 20704040  MOVI    R7, 16448 (0x4040)
    [ 6] 20803f80  MOVI    R8, 16256 (0x3f80)
    [ 7] 20903f80  MOVI    R9, 16256 (0x3f80)
    [ 8] 20a03f80  MOVI    R10, 16256 (0x3f80)
    [ 9] 20b03f80  MOVI    R11, 16256 (0x3f80)
    [10] ecc04800  WMMA.MMA  D=R12..15, A=R0..3, B=R4..7, C=R8..11
    [11] c8000000  RET
  RF dump       R0     R1     R2     R3     R4     R5     R6     R7     R8     R9
       SP0:   4000  0000  0000  0000  4040  4040  4040  4040  3f80  3f80  3f80  3f80
       SP1:   0000  4000  0000  0000  4040  4040  4040  4040  3f80  3f80  3f80  3f80
       SP2:   0000  0000  4000  0000  4040  4040  4040  4040  3f80  3f80  3f80  3f80
       SP3:   0000  0000  0000  4000  4040  4040  4040  4040  3f80  3f80  3f80  3f80
[PASS] T321: K24 D[i][0]=7.0  SP0.R12 = 0x40e0
[PASS] T322: K24 D[i][0]=7.0  SP1.R12 = 0x40e0
[PASS] T323: K24 D[i][0]=7.0  SP2.R12 = 0x40e0
[PASS] T324: K24 D[i][0]=7.0  SP3.R12 = 0x40e0
[PASS] T325: K24 D[i][1]=7.0  SP0.R13 = 0x40e0
[PASS] T326: K24 D[i][1]=7.0  SP1.R13 = 0x40e0
[PASS] T327: K24 D[i][1]=7.0  SP2.R13 = 0x40e0
[PASS] T328: K24 D[i][1]=7.0  SP3.R13 = 0x40e0
[PASS] T329: K24 D[i][2]=7.0  SP0.R14 = 0x40e0
[PASS] T330: K24 D[i][2]=7.0  SP1.R14 = 0x40e0
[PASS] T331: K24 D[i][2]=7.0  SP2.R14 = 0x40e0
[PASS] T332: K24 D[i][2]=7.0  SP3.R14 = 0x40e0
[PASS] T333: K24 D[i][3]=7.0  SP0.R15 = 0x40e0
[PASS] T334: K24 D[i][3]=7.0  SP1.R15 = 0x40e0
[PASS] T335: K24 D[i][3]=7.0  SP2.R15 = 0x40e0
[PASS] T336: K24 D[i][3]=7.0  SP3.R15 = 0x40e0

--- K25: PTX K1 vec_add int16 ---
  Program listing:
    [ 0] 1c000000  MOV.TID R0
    [ 1] 20100000  MOVI    R1, 0 (0x0000)
    [ 2] 20200010  MOVI    R2, 16 (0x0010)
    [ 3] 20300020  MOVI    R3, 32 (0x0020)
    [ 4] 88400001  SHL     R4, R0, 1
    [ 5] 30514000  ADD     R5, R1, R4
    [ 6] 10550000  LD      R5, [R5 + 0]
    [ 7] 30624000  ADD     R6, R2, R4
    [ 8] 10660000  LD      R6, [R6 + 0]
    [ 9] 30765000  ADD     R7, R6, R5
    [10] 30834000  ADD     R8, R3, R4
    [11] 08780000  ST      R7, [R8 + 0]
    [12] c8000000  RET
  [C000] PC=0 ir=00000000 dec=00000000 NOP      fv=0 lat=0 | fstl=0 sb=0 exb=0 sps=0 f
  [C001] PC=0 ir=1c000000 dec=1c000000 MOV      fv=0 lat=0 | fstl=0 sb=0 exb=0 sps=0 f
  [C002] PC=1 ir=1c000000 dec=1c000000 MOV      fv=1 lat=0 | fstl=0 sb=0 exb=0 sps=0 f
  [C003] PC=2 ir=20100000 dec=20100000 MOVI     fv=1 lat=0 | fstl=0 sb=0 exb=0 sps=0 f
  [C004] PC=3 ir=20200010 dec=20200010 MOVI     fv=1 lat=0 | fstl=0 sb=0 exb=0 sps=0 f
  [C005] PC=4 ir=20300020 dec=20300020 MOVI     fv=1 lat=0 | fstl=0 sb=0 exb=0 sps=0 f
```

```
  [C006] PC=5 ir=88400001 dec=88400001 SHL      fv=1 lat=0 | fstl=0 sb=0 exb=0 sps=0 f
  [C007] PC=6 ir=30514000 dec=30514000 ADD      fv=1 lat=0 | fstl=1 sb=1 exb=0 sps=0 f
  [C008] PC=6 ir=10550000 dec=30514000 ADD      fv=1 lat=1 | fstl=1 sb=1 exb=0 sps=0 f
  [C009] PC=6 ir=10550000 dec=30514000 ADD      fv=1 lat=1 | fstl=0 sb=0 exb=0 sps=0 f
  [C010] PC=7 ir=10550000 dec=10550000 LD       fv=1 lat=0 | fstl=1 sb=1 exb=0 sps=0 f
  [C011] PC=7 ir=30624000 dec=10550000 LD       fv=1 lat=1 | fstl=1 sb=1 exb=0 sps=0 f
  [C012] PC=7 ir=30624000 dec=10550000 LD       fv=1 lat=1 | fstl=0 sb=0 exb=0 sps=0 f
  [C013] PC=8 ir=30624000 dec=30624000 ADD      fv=1 lat=0 | fstl=0 sb=0 exb=0 sps=0 f
  [C014] PC=9 ir=10660000 dec=10660000 LD       fv=1 lat=0 | fstl=1 sb=1 exb=0 sps=0 f
  [C015] PC=9 ir=30765000 dec=10660000 LD       fv=1 lat=1 | fstl=1 sb=1 exb=0 sps=0 f
  [C016] PC=9 ir=30765000 dec=10660000 LD       fv=1 lat=1 | fstl=0 sb=0 exb=0 sps=0 f
  [C017] PC=10 ir=30765000 dec=30765000 ADD      fv=1 lat=0 | fstl=1 sb=1 exb=0 sps=0
  [C018] PC=10 ir=30834000 dec=30765000 ADD      fv=1 lat=1 | fstl=1 sb=1 exb=0 sps=0
  [C019] PC=10 ir=30834000 dec=30765000 ADD      fv=1 lat=1 | fstl=0 sb=0 exb=0 sps=0
  [C020] PC=11 ir=30834000 dec=30834000 ADD      fv=1 lat=0 | fstl=0 sb=0 exb=0 sps=0
  [C021] PC=12 ir=08780000 dec=08780000 ST       fv=1 lat=0 | fstl=1 sb=1 exb=0 sps=0
  [C022] PC=12 ir=c8000000 dec=08780000 ST       fv=1 lat=1 | fstl=1 sb=1 exb=0 sps=0
  [C023] PC=12 ir=c8000000 dec=08780000 ST       fv=1 lat=1 | fstl=0 sb=0 exb=0 sps=0
  [C024] PC=13 ir=c8000000 dec=c8000000 RET      fv=1 lat=0 | fstl=0 sb=0 exb=0 sps=0
  [C025] PC=13 ir=00000000 dec=00000000 NOP      fv=0 lat=0 | fstl=0 sb=0 exb=0 sps=0
  [C026] PC=13 ir=00000000 dec=00000000 NOP      fv=0 lat=0 | fstl=0 sb=0 exb=0 sps=0
  [C027] PC=13 ir=00000000 dec=00000000 NOP      fv=0 lat=0 | fstl=0 sb=0 exb=0 sps=0
  [C028] PC=13 ir=00000000 dec=00000000 NOP      fv=0 lat=0 | fstl=0 sb=0 exb=0 sps=0
[PASS] T337: K25 SP0 C[0]=10+5  SP0.DMEM[32] = 0x000f
[PASS] T338: K25 SP1 C[1]=20+15  SP1.DMEM[34] = 0x0023
[PASS] T339: K25 SP2 C[2]=30+25  SP2.DMEM[36] = 0x0037
[PASS] T340: K25 SP3 C[3]=40+35  SP3.DMEM[38] = 0x004b

--- K26: PTX K2 vec_sub int16 ---
  Program listing:
    [ 0] 1c000000  MOV.TID R0
    [ 1] 20100000  MOVI    R1, 0 (0x0000)
    [ 2] 20200010  MOVI    R2, 16 (0x0010)
    [ 3] 20300020  MOVI    R3, 32 (0x0020)
    [ 4] 88400001  SHL     R4, R0, 1
    [ 5] 30514000  ADD     R5, R1, R4
    [ 6] 10550000  LD      R5, [R5 + 0]
    [ 7] 30624000  ADD     R6, R2, R4
    [ 8] 10660000  LD      R6, [R6 + 0]
    [ 9] 38756000  SUB     R7, R5, R6
    [10] 30834000  ADD     R8, R3, R4
    [11] 08780000  ST      R7, [R8 + 0]
    [12] c8000000  RET
[PASS] T341: K26 SP0 C[0]=100-30  SP0.DMEM[32] = 0x0046
[PASS] T342: K26 SP1 C[1]=200-50  SP1.DMEM[34] = 0x0096
[PASS] T343: K26 SP2 C[2]=300-100  SP2.DMEM[36] = 0x00c8
[PASS] T344: K26 SP3 C[3]=400-150  SP3.DMEM[38] = 0x00fa

--- K27: PTX K3 bf16_vector_mul ---
  Program listing:
    [ 0] 1c000000  MOV.TID R0
    [ 1] 20100000  MOVI    R1, 0 (0x0000)
    [ 2] 20200010  MOVI    R2, 16 (0x0010)
    [ 3] 20300020  MOVI    R3, 32 (0x0020)
    [ 4] 88400001  SHL     R4, R0, 1
```

```
    [ 5] 30514000  ADD     R5, R1, R4
    [ 6] 14550000  LD      R5, [R5 + 0]
    [ 7] 30624000  ADD     R6, R2, R4
    [ 8] 14660000  LD      R6, [R6 + 0]
    [ 9] 44756000  MUL.f   R7, R5, R6
    [10] 30834000  ADD     R8, R3, R4
    [11] 0c780000  ST      R7, [R8 + 0]
    [12] c8000000  RET
[PASS] T345: K27 MUL.f 2*3=6.0  SP0.R7 = 0x40c0
[PASS] T346: K27 MUL.f 2*3=6.0  SP1.R7 = 0x40c0
[PASS] T347: K27 MUL.f 2*3=6.0  SP2.R7 = 0x40c0
[PASS] T348: K27 MUL.f 2*3=6.0  SP3.R7 = 0x40c0
[PASS] T349: K27 SP0 C=6.0  SP0.DMEM[32] = 0x40c0
[PASS] T350: K27 SP1 C=6.0  SP1.DMEM[34] = 0x40c0
[PASS] T351: K27 SP2 C=6.0  SP2.DMEM[36] = 0x40c0
[PASS] T352: K27 SP3 C=6.0  SP3.DMEM[38] = 0x40c0

--- K28: PTX K4 bf16_fma ---
  D = A*B + C = 2.0*3.0 + 1.0 = 7.0 (0x40E0)
  Program listing:
    [ 0] 1c000000  MOV.TID R0
    [ 1] 20100000  MOVI    R1, 0 (0x0000)
    [ 2] 20200010  MOVI    R2, 16 (0x0010)
    [ 3] 20300020  MOVI    R3, 32 (0x0020)
    [ 4] 20900030  MOVI    R9, 48 (0x0030)
    [ 5] 88400001  SHL     R4, R0, 1
    [ 6] 30514000  ADD     R5, R1, R4
    [ 7] 14550000  LD      R5, [R5 + 0]
    [ 8] 30624000  ADD     R6, R2, R4
    [ 9] 14660000  LD      R6, [R6 + 0]
    [10] 30734000  ADD     R7, R3, R4
    [11] 14770000  LD      R7, [R7 + 0]
    [12] 4c756000  FMA.f   R7, R5, R6, R7
    [13] 30894000  ADD     R8, R9, R4
    [14] 0c780000  ST      R7, [R8 + 0]
    [15] c8000000  RET
  [C000] PC=0 ir=00000000 dec=00000000 NOP      fv=0 lat=0 | fstl=0 sb=0 exb=0 sps=0 f
  [C001] PC=0 ir=1c000000 dec=1c000000 MOV      fv=0 lat=0 | fstl=0 sb=0 exb=0 sps=0 f
  [C002] PC=1 ir=1c000000 dec=1c000000 MOV      fv=1 lat=0 | fstl=0 sb=0 exb=0 sps=0 f
  [C003] PC=2 ir=20100000 dec=20100000 MOVI     fv=1 lat=0 | fstl=0 sb=0 exb=0 sps=0 f
  [C004] PC=3 ir=20200010 dec=20200010 MOVI     fv=1 lat=0 | fstl=0 sb=0 exb=0 sps=0 f
  [C005] PC=4 ir=20300020 dec=20300020 MOVI     fv=1 lat=0 | fstl=0 sb=0 exb=0 sps=0 f
  [C006] PC=5 ir=20900030 dec=20900030 MOVI     fv=1 lat=0 | fstl=0 sb=0 exb=0 sps=0 f
  [C007] PC=6 ir=88400001 dec=88400001 SHL      fv=1 lat=0 | fstl=0 sb=0 exb=0 sps=0 f
  [C008] PC=7 ir=30514000 dec=30514000 ADD      fv=1 lat=0 | fstl=1 sb=1 exb=0 sps=0 f
  [C009] PC=7 ir=14550000 dec=30514000 ADD      fv=1 lat=1 | fstl=1 sb=1 exb=0 sps=0 f
  [C010] PC=7 ir=14550000 dec=30514000 ADD      fv=1 lat=1 | fstl=0 sb=0 exb=0 sps=0 f
  [C011] PC=8 ir=14550000 dec=14550000 LD       fv=1 lat=0 | fstl=1 sb=1 exb=0 sps=0 f
  [C012] PC=8 ir=30624000 dec=14550000 LD       fv=1 lat=1 | fstl=1 sb=1 exb=0 sps=0 f
  [C013] PC=8 ir=30624000 dec=14550000 LD       fv=1 lat=1 | fstl=0 sb=0 exb=0 sps=0 f
  [C014] PC=9 ir=30624000 dec=30624000 ADD      fv=1 lat=0 | fstl=0 sb=0 exb=0 sps=0 f
  [C015] PC=10 ir=14660000 dec=14660000 LD       fv=1 lat=0 | fstl=1 sb=1 exb=0 sps=0
  [C016] PC=10 ir=30734000 dec=14660000 LD       fv=1 lat=1 | fstl=1 sb=1 exb=0 sps=0
  [C017] PC=10 ir=30734000 dec=14660000 LD       fv=1 lat=1 | fstl=0 sb=0 exb=0 sps=0
  [C018] PC=11 ir=30734000 dec=30734000 ADD      fv=1 lat=0 | fstl=0 sb=0 exb=0 sps=0
```

```
  [C019] PC=12 ir=14770000 dec=14770000 LD       fv=1 lat=0 | fstl=1 sb=1 exb=0 sps=0
  [C020] PC=12 ir=4c756000 dec=14770000 LD       fv=1 lat=1 | fstl=1 sb=1 exb=0 sps=0
  [C021] PC=12 ir=4c756000 dec=14770000 LD       fv=1 lat=1 | fstl=0 sb=0 exb=0 sps=0
  [C022] PC=13 ir=4c756000 dec=4c756000 FMA      fv=1 lat=0 | fstl=1 sb=1 exb=0 sps=0
  [C023] PC=13 ir=30894000 dec=4c756000 FMA      fv=1 lat=1 | fstl=1 sb=1 exb=0 sps=0
  [C024] PC=13 ir=30894000 dec=4c756000 FMA      fv=1 lat=1 | fstl=0 sb=0 exb=0 sps=0
  [C025] PC=14 ir=30894000 dec=30894000 ADD      fv=1 lat=0 | fstl=1 sb=0 exb=1 sps=1
  [C026] PC=14 ir=0c780000 dec=30894000 ADD      fv=1 lat=1 | fstl=1 sb=0 exb=1 sps=1
  [C027] PC=14 ir=0c780000 dec=30894000 ADD      fv=1 lat=1 | fstl=1 sb=0 exb=1 sps=1
  [C028] PC=14 ir=0c780000 dec=30894000 ADD      fv=1 lat=1 | fstl=1 sb=0 exb=1 sps=1
  [C029] PC=14 ir=0c780000 dec=30894000 ADD      fv=1 lat=1 | fstl=1 sb=0 exb=1 sps=1
  [C030] PC=14 ir=0c780000 dec=30894000 ADD      fv=1 lat=1 | fstl=1 sb=0 exb=1 sps=1
  [C031] PC=14 ir=0c780000 dec=30894000 ADD      fv=1 lat=1 | fstl=1 sb=0 exb=1 sps=1
  [C032] PC=14 ir=0c780000 dec=30894000 ADD      fv=1 lat=1 | fstl=1 sb=0 exb=1 sps=1
  [C033] PC=14 ir=0c780000 dec=30894000 ADD      fv=1 lat=1 | fstl=0 sb=0 exb=0 sps=0
  [C034] PC=15 ir=0c780000 dec=0c780000 ST       fv=1 lat=0 | fstl=1 sb=1 exb=0 sps=0
  [C035] PC=15 ir=c8000000 dec=0c780000 ST       fv=1 lat=1 | fstl=1 sb=1 exb=0 sps=0
  [C036] PC=15 ir=c8000000 dec=0c780000 ST       fv=1 lat=1 | fstl=0 sb=0 exb=0 sps=0
  [C037] PC=16 ir=c8000000 dec=c8000000 RET      fv=1 lat=0 | fstl=0 sb=0 exb=0 sps=0
  [C038] PC=16 ir=00000000 dec=00000000 NOP      fv=0 lat=0 | fstl=0 sb=0 exb=0 sps=0
  [C039] PC=16 ir=00000000 dec=00000000 NOP      fv=0 lat=0 | fstl=0 sb=0 exb=0 sps=0
  [C040] PC=16 ir=00000000 dec=00000000 NOP      fv=0 lat=0 | fstl=0 sb=0 exb=0 sps=0
  [C041] PC=16 ir=00000000 dec=00000000 NOP      fv=0 lat=0 | fstl=0 sb=0 exb=0 sps=0
[PASS] T353: K28 FMA.f 2*3+1=7.0  SP0.R7 = 0x40e0
[PASS] T354: K28 FMA.f 2*3+1=7.0  SP1.R7 = 0x40e0
[PASS] T355: K28 FMA.f 2*3+1=7.0  SP2.R7 = 0x40e0
[PASS] T356: K28 FMA.f 2*3+1=7.0  SP3.R7 = 0x40e0
[PASS] T357: K28 SP0 D=7.0  SP0.DMEM[48] = 0x40e0
[PASS] T358: K28 SP1 D=7.0  SP1.DMEM[50] = 0x40e0
[PASS] T359: K28 SP2 D=7.0  SP2.DMEM[52] = 0x40e0
[PASS] T360: K28 SP3 D=7.0  SP3.DMEM[54] = 0x40e0

--- K29: PTX K5 relu bf16 ---
  ReLU: max(x, 0) — per-thread divergent inputs
  Program listing:
    [ 0] 1c000000  MOV.TID R0
    [ 1] 20100000  MOVI    R1, 0 (0x0000)
    [ 2] 20200010  MOVI    R2, 16 (0x0010)
    [ 3] 88400001  SHL     R4, R0, 1
    [ 4] 30514000  ADD     R5, R1, R4
    [ 5] 14550000  LD      R5, [R5 + 0]
    [ 6] 20800000  MOVI    R8, 0 (0x0000)
    [ 7] 54658000  MAX.f   R6, R5, R8
    [ 8] 30724000  ADD     R7, R2, R4
    [ 9] 0c670000  ST      R6, [R7 + 0]
    [10] c8000000  RET
  [C000] PC=0 ir=00000000 dec=00000000 NOP      fv=0 lat=0 | fstl=0 sb=0 exb=0 sps=0 f
  [C001] PC=0 ir=1c000000 dec=1c000000 MOV      fv=0 lat=0 | fstl=0 sb=0 exb=0 sps=0 f
  [C002] PC=1 ir=1c000000 dec=1c000000 MOV      fv=1 lat=0 | fstl=0 sb=0 exb=0 sps=0 f
  [C003] PC=2 ir=20100000 dec=20100000 MOVI     fv=1 lat=0 | fstl=0 sb=0 exb=0 sps=0 f
  [C004] PC=3 ir=20200010 dec=20200010 MOVI     fv=1 lat=0 | fstl=0 sb=0 exb=0 sps=0 f
  [C005] PC=4 ir=88400001 dec=88400001 SHL      fv=1 lat=0 | fstl=0 sb=0 exb=0 sps=0 f
  [C006] PC=5 ir=30514000 dec=30514000 ADD      fv=1 lat=0 | fstl=1 sb=1 exb=0 sps=0 f
  [C007] PC=5 ir=14550000 dec=30514000 ADD      fv=1 lat=1 | fstl=1 sb=1 exb=0 sps=0 f
  [C008] PC=5 ir=14550000 dec=30514000 ADD      fv=1 lat=1 | fstl=0 sb=0 exb=0 sps=0 f
```

```
  [C009] PC=6 ir=14550000 dec=14550000 LD       fv=1 lat=0 | fstl=1 sb=1 exb=0 sps=0 f
  [C010] PC=6 ir=20800000 dec=14550000 LD       fv=1 lat=1 | fstl=1 sb=1 exb=0 sps=0 f
  [C011] PC=6 ir=20800000 dec=14550000 LD       fv=1 lat=1 | fstl=0 sb=0 exb=0 sps=0 f
  [C012] PC=7 ir=20800000 dec=20800000 MOVI     fv=1 lat=0 | fstl=0 sb=0 exb=0 sps=0 f
  [C013] PC=8 ir=54658000 dec=54658000 MAX      fv=1 lat=0 | fstl=1 sb=1 exb=0 sps=0 f
  [C014] PC=8 ir=30724000 dec=54658000 MAX      fv=1 lat=1 | fstl=1 sb=1 exb=0 sps=0 f
  [C015] PC=8 ir=30724000 dec=54658000 MAX      fv=1 lat=1 | fstl=0 sb=0 exb=0 sps=0 f
  [C016] PC=9 ir=30724000 dec=30724000 ADD      fv=1 lat=0 | fstl=0 sb=0 exb=0 sps=0 f
  [C017] PC=10 ir=0c670000 dec=0c670000 ST       fv=1 lat=0 | fstl=1 sb=1 exb=0 sps=0
  [C018] PC=10 ir=c8000000 dec=0c670000 ST       fv=1 lat=1 | fstl=1 sb=1 exb=0 sps=0
  [C019] PC=10 ir=c8000000 dec=0c670000 ST       fv=1 lat=1 | fstl=0 sb=0 exb=0 sps=0
  [C020] PC=11 ir=c8000000 dec=c8000000 RET      fv=1 lat=0 | fstl=0 sb=0 exb=0 sps=0
  [C021] PC=11 ir=00000000 dec=00000000 NOP      fv=0 lat=0 | fstl=0 sb=0 exb=0 sps=0
  [C022] PC=11 ir=00000000 dec=00000000 NOP      fv=0 lat=0 | fstl=0 sb=0 exb=0 sps=0
  [C023] PC=11 ir=00000000 dec=00000000 NOP      fv=0 lat=0 | fstl=0 sb=0 exb=0 sps=0
  [C024] PC=11 ir=00000000 dec=00000000 NOP      fv=0 lat=0 | fstl=0 sb=0 exb=0 sps=0
[PASS] T361: K29 SP0 relu(-1)=0  SP0.R6 = 0x0000
[PASS] T362: K29 SP1 relu(2)=2.0  SP1.R6 = 0x4000
[PASS] T363: K29 SP2 relu(-3)=0  SP2.R6 = 0x0000
[PASS] T364: K29 SP3 relu(5)=5.0  SP3.R6 = 0x40a0
[PASS] T365: K29 SP0 out=0.0  SP0.DMEM[16] = 0x0000
[PASS] T366: K29 SP1 out=2.0  SP1.DMEM[18] = 0x4000
[PASS] T367: K29 SP2 out=0.0  SP2.DMEM[20] = 0x0000
[PASS] T368: K29 SP3 out=5.0  SP3.DMEM[22] = 0x40a0

--- K30: PTX K6 wmma_bf16 4x4 matmul ---
  D = I(4x4) * 2*ones(4x4) + 0 = 2*ones
  Row stride = tid*8, base_A=0, base_B=32, base_D=64
  Program listing:
    [ 0] 1c000000  MOV.TID R0
    [ 1] 20100000  MOVI    R1, 0 (0x0000)
    [ 2] 20200020  MOVI    R2, 32 (0x0020)
    [ 3] 20300040  MOVI    R3, 64 (0x0040)
    [ 4] 88400003  SHL     R4, R0, 3
    [ 5] 30114000  ADD     R1, R1, R4
    [ 6] 30224000  ADD     R2, R2, R4
    [ 7] 30334000  ADD     R3, R3, R4
    [ 8] f4410000  WMMA.LOAD R4..7, [R1 + 0]
    [ 9] f4820000  WMMA.LOAD R8..11, [R2 + 0]
    [10] 20c00000  MOVI    R12, 0 (0x0000)
    [11] 20d00000  MOVI    R13, 0 (0x0000)
    [12] 20e00000  MOVI    R14, 0 (0x0000)
    [13] 20f00000  MOVI    R15, 0 (0x0000)
    [14] ecc48c00  WMMA.MMA  D=R12..15, A=R4..7, B=R8..11, C=R12..15
    [15] fcc30000  WMMA.STORE R12..15, [R3 + 0]
    [16] c8000000  RET
  [C000] PC=0 ir=00000000 dec=00000000 NOP      fv=0 lat=0 | fstl=0 sb=0 exb=0 sps=0 f
  [C001] PC=0 ir=1c000000 dec=1c000000 MOV      fv=0 lat=0 | fstl=0 sb=0 exb=0 sps=0 f
  [C002] PC=1 ir=1c000000 dec=1c000000 MOV      fv=1 lat=0 | fstl=0 sb=0 exb=0 sps=0 f
  [C003] PC=2 ir=20100000 dec=20100000 MOVI     fv=1 lat=0 | fstl=0 sb=0 exb=0 sps=0 f
  [C004] PC=3 ir=20200020 dec=20200020 MOVI     fv=1 lat=0 | fstl=0 sb=0 exb=0 sps=0 f
  [C005] PC=4 ir=20300040 dec=20300040 MOVI     fv=1 lat=0 | fstl=0 sb=0 exb=0 sps=0 f
  [C006] PC=5 ir=88400003 dec=88400003 SHL      fv=1 lat=0 | fstl=0 sb=0 exb=0 sps=0 f
  [C007] PC=6 ir=30114000 dec=30114000 ADD      fv=1 lat=0 | fstl=1 sb=1 exb=0 sps=0 f
  [C008] PC=6 ir=30224000 dec=30114000 ADD      fv=1 lat=1 | fstl=1 sb=1 exb=0 sps=0 f
```

```
[C009] PC=6 ir=30224000 dec=30114000 ADD      fv=1 lat=1 | fstl=0 sb=0 exb=0 sps=0 f
[C010] PC=7 ir=30224000 dec=30224000 ADD      fv=1 lat=0 | fstl=0 sb=0 exb=0 sps=0 f
[C011] PC=8 ir=30334000 dec=30334000 ADD      fv=1 lat=0 | fstl=0 sb=0 exb=0 sps=0 f
[C012] PC=9 ir=f4410000 dec=f4410000 WMMA.LD  fv=1 lat=0 | fstl=1 sb=0 exb=0 sps=0 f
[C013] PC=9 ir=f4820000 dec=f4410000 WMMA.LD  fv=1 lat=1 | fstl=1 sb=0 exb=0 sps=0 f
[C014] PC=9 ir=f4820000 dec=f4410000 WMMA.LD  fv=1 lat=1 | fstl=1 sb=0 exb=0 sps=0 f
[C015] PC=9 ir=f4820000 dec=f4410000 WMMA.LD  fv=1 lat=1 | fstl=0 sb=0 exb=0 sps=0 f
[C016] PC=10 ir=f4820000 dec=f4820000 WMMA.LD  fv=1 lat=0 | fstl=1 sb=0 exb=0 sps=1
[C017] PC=10 ir=20c00000 dec=f4820000 WMMA.LD  fv=1 lat=1 | fstl=1 sb=0 exb=0 sps=1
[C018] PC=10 ir=20c00000 dec=f4820000 WMMA.LD  fv=1 lat=1 | fstl=1 sb=0 exb=0 sps=1
[C019] PC=10 ir=20c00000 dec=f4820000 WMMA.LD  fv=1 lat=1 | fstl=1 sb=0 exb=0 sps=1
[C020] PC=10 ir=20c00000 dec=f4820000 WMMA.LD  fv=1 lat=1 | fstl=1 sb=0 exb=0 sps=1
[C021] PC=10 ir=20c00000 dec=f4820000 WMMA.LD  fv=1 lat=1 | fstl=0 sb=0 exb=0 sps=0
[C022] PC=11 ir=20c00000 dec=20c00000 MOVI     fv=1 lat=0 | fstl=1 sb=0 exb=0 sps=1
[C023] PC=11 ir=20d00000 dec=20c00000 MOVI     fv=1 lat=1 | fstl=1 sb=0 exb=0 sps=1
[C024] PC=11 ir=20d00000 dec=20c00000 MOVI     fv=1 lat=1 | fstl=1 sb=0 exb=0 sps=1
[C025] PC=11 ir=20d00000 dec=20c00000 MOVI     fv=1 lat=1 | fstl=1 sb=0 exb=0 sps=1
[C026] PC=11 ir=20d00000 dec=20c00000 MOVI     fv=1 lat=1 | fstl=1 sb=0 exb=0 sps=1
[C027] PC=11 ir=20d00000 dec=20c00000 MOVI     fv=1 lat=1 | fstl=0 sb=0 exb=0 sps=0
[C028] PC=12 ir=20d00000 dec=20d00000 MOVI     fv=1 lat=0 | fstl=0 sb=0 exb=0 sps=0
[C029] PC=13 ir=20e00000 dec=20e00000 MOVI     fv=1 lat=0 | fstl=0 sb=0 exb=0 sps=0
[C030] PC=14 ir=20f00000 dec=20f00000 MOVI     fv=1 lat=0 | fstl=0 sb=0 exb=0 sps=0
[C031] PC=15 ir=ecc48c00 dec=ecc48c00 WMMA.MMA fv=1 lat=0 | fstl=1 sb=0 exb=0 sps=0
[C032] PC=15 ir=fcc30000 dec=ecc48c00 WMMA.MMA fv=1 lat=1 | fstl=1 sb=0 exb=0 sps=0
[C033] PC=15 ir=fcc30000 dec=ecc48c00 WMMA.MMA fv=1 lat=1 | fstl=1 sb=0 exb=0 sps=0
[C034] PC=15 ir=fcc30000 dec=ecc48c00 WMMA.MMA fv=1 lat=1 | fstl=0 sb=0 exb=0 sps=0
[C035] PC=16 ir=fcc30000 dec=fcc30000 WMMA.ST  fv=1 lat=0 | fstl=1 sb=0 exb=0 sps=1
[C036] PC=16 ir=c8000000 dec=fcc30000 WMMA.ST  fv=1 lat=1 | fstl=1 sb=0 exb=0 sps=1
[C037] PC=16 ir=c8000000 dec=fcc30000 WMMA.ST  fv=1 lat=1 | fstl=1 sb=0 exb=0 sps=1
[C038] PC=16 ir=c8000000 dec=fcc30000 WMMA.ST  fv=1 lat=1 | fstl=1 sb=0 exb=0 sps=1
[C039] PC=16 ir=c8000000 dec=fcc30000 WMMA.ST  fv=1 lat=1 | fstl=1 sb=0 exb=0 sps=1
[C040] PC=16 ir=c8000000 dec=fcc30000 WMMA.ST  fv=1 lat=1 | fstl=1 sb=0 exb=0 sps=1
[C041] PC=16 ir=c8000000 dec=fcc30000 WMMA.ST  fv=1 lat=1 | fstl=1 sb=0 exb=0 sps=1
[C042] PC=16 ir=c8000000 dec=fcc30000 WMMA.ST  fv=1 lat=1 | fstl=1 sb=0 exb=0 sps=1
[C043] PC=16 ir=c8000000 dec=fcc30000 WMMA.ST  fv=1 lat=1 | fstl=1 sb=0 exb=0 sps=1
[C044] PC=16 ir=c8000000 dec=fcc30000 WMMA.ST  fv=1 lat=1 | fstl=1 sb=0 exb=0 sps=1
[C045] PC=16 ir=c8000000 dec=fcc30000 WMMA.ST  fv=1 lat=1 | fstl=1 sb=0 exb=0 sps=1
[C046] PC=16 ir=c8000000 dec=fcc30000 WMMA.ST  fv=1 lat=1 | fstl=1 sb=0 exb=0 sps=1
[C047] PC=16 ir=c8000000 dec=fcc30000 WMMA.ST  fv=1 lat=1 | fstl=1 sb=0 exb=0 sps=1
[C048] PC=16 ir=c8000000 dec=fcc30000 WMMA.ST  fv=1 lat=1 | fstl=1 sb=0 exb=0 sps=1
[C049] PC=16 ir=c8000000 dec=fcc30000 WMMA.ST  fv=1 lat=1 | fstl=1 sb=0 exb=0 sps=1
[C050] PC=16 ir=c8000000 dec=fcc30000 WMMA.ST  fv=1 lat=1 | fstl=1 sb=0 exb=0 sps=1
[C051] PC=16 ir=c8000000 dec=fcc30000 WMMA.ST  fv=1 lat=1 | fstl=1 sb=0 exb=0 sps=1
[C052] PC=16 ir=c8000000 dec=fcc30000 WMMA.ST  fv=1 lat=1 | fstl=1 sb=0 exb=0 sps=1
[C053] PC=16 ir=c8000000 dec=fcc30000 WMMA.ST  fv=1 lat=1 | fstl=1 sb=0 exb=0 sps=1
[C054] PC=16 ir=c8000000 dec=fcc30000 WMMA.ST  fv=1 lat=1 | fstl=1 sb=0 exb=0 sps=1
[C055] PC=16 ir=c8000000 dec=fcc30000 WMMA.ST  fv=1 lat=1 | fstl=1 sb=0 exb=0 sps=1
[C056] PC=16 ir=c8000000 dec=fcc30000 WMMA.ST  fv=1 lat=1 | fstl=1 sb=0 exb=0 sps=1
[C057] PC=16 ir=c8000000 dec=fcc30000 WMMA.ST  fv=1 lat=1 | fstl=1 sb=0 exb=0 sps=1
[C058] PC=16 ir=c8000000 dec=fcc30000 WMMA.ST  fv=1 lat=1 | fstl=1 sb=0 exb=0 sps=1
[C059] PC=16 ir=c8000000 dec=fcc30000 WMMA.ST  fv=1 lat=1 | fstl=1 sb=0 exb=0 sps=1
[C060] PC=16 ir=c8000000 dec=fcc30000 WMMA.ST  fv=1 lat=1 | fstl=1 sb=0 exb=0 sps=1
[C061] PC=16 ir=c8000000 dec=fcc30000 WMMA.ST  fv=1 lat=1 | fstl=1 sb=0 exb=0 sps=1
[C062] PC=16 ir=c8000000 dec=fcc30000 WMMA.ST  fv=1 lat=1 | fstl=1 sb=0 exb=0 sps=1
[C063] PC=16 ir=c8000000 dec=fcc30000 WMMA.ST  fv=1 lat=1 | fstl=1 sb=0 exb=0 sps=1
```

```
  [C064] PC=16 ir=c8000000 dec=fcc30000 WMMA.ST  fv=1 lat=1 | fstl=1 sb=0 exb=0 sps=1
  [C065] PC=16 ir=c8000000 dec=fcc30000 WMMA.ST  fv=1 lat=1 | fstl=1 sb=0 exb=0 sps=1
  [C066] PC=16 ir=c8000000 dec=fcc30000 WMMA.ST  fv=1 lat=1 | fstl=1 sb=0 exb=0 sps=1
  [C067] PC=16 ir=c8000000 dec=fcc30000 WMMA.ST  fv=1 lat=1 | fstl=1 sb=0 exb=0 sps=1
  [C068] PC=16 ir=c8000000 dec=fcc30000 WMMA.ST  fv=1 lat=1 | fstl=1 sb=0 exb=0 sps=1
  [C069] PC=16 ir=c8000000 dec=fcc30000 WMMA.ST  fv=1 lat=1 | fstl=1 sb=0 exb=0 sps=1
  [C070] PC=16 ir=c8000000 dec=fcc30000 WMMA.ST  fv=1 lat=1 | fstl=1 sb=0 exb=0 sps=1
  [C071] PC=16 ir=c8000000 dec=fcc30000 WMMA.ST  fv=1 lat=1 | fstl=1 sb=0 exb=0 sps=1
  [C072] PC=16 ir=c8000000 dec=fcc30000 WMMA.ST  fv=1 lat=1 | fstl=1 sb=0 exb=0 sps=1
  [C073] PC=16 ir=c8000000 dec=fcc30000 WMMA.ST  fv=1 lat=1 | fstl=1 sb=0 exb=0 sps=1
  [C074] PC=16 ir=c8000000 dec=fcc30000 WMMA.ST  fv=1 lat=1 | fstl=1 sb=0 exb=0 sps=1
  [C075] PC=16 ir=c8000000 dec=fcc30000 WMMA.ST  fv=1 lat=1 | fstl=1 sb=0 exb=0 sps=1
  [C076] PC=16 ir=c8000000 dec=fcc30000 WMMA.ST  fv=1 lat=1 | fstl=1 sb=0 exb=0 sps=1
  [C077] PC=16 ir=c8000000 dec=fcc30000 WMMA.ST  fv=1 lat=1 | fstl=1 sb=0 exb=0 sps=1
  [C078] PC=16 ir=c8000000 dec=fcc30000 WMMA.ST  fv=1 lat=1 | fstl=0 sb=0 exb=0 sps=0
  [C079] PC=17 ir=c8000000 dec=c8000000 RET      fv=1 lat=0 | fstl=1 sb=0 exb=0 sps=1
  [C080] PC=17 ir=00000000 dec=c8000000 RET      fv=1 lat=1 | fstl=1 sb=0 exb=0 sps=1
  [C081] PC=17 ir=00000000 dec=c8000000 RET      fv=1 lat=1 | fstl=1 sb=0 exb=0 sps=1
  [C082] PC=17 ir=00000000 dec=c8000000 RET      fv=1 lat=1 | fstl=1 sb=0 exb=0 sps=1
  [C083] PC=17 ir=00000000 dec=c8000000 RET      fv=1 lat=1 | fstl=1 sb=0 exb=0 sps=1
  [C084] PC=17 ir=00000000 dec=c8000000 RET      fv=1 lat=1 | fstl=0 sb=0 exb=0 sps=0
  [C085] PC=17 ir=00000000 dec=00000000 NOP      fv=0 lat=0 | fstl=0 sb=0 exb=0 sps=0
  [C086] PC=17 ir=00000000 dec=00000000 NOP      fv=0 lat=0 | fstl=0 sb=0 exb=0 sps=0
  [C087] PC=17 ir=00000000 dec=00000000 NOP      fv=0 lat=0 | fstl=0 sb=0 exb=0 sps=0
  [C088] PC=17 ir=00000000 dec=00000000 NOP      fv=0 lat=0 | fstl=0 sb=0 exb=0 sps=0
  Post-exec RF dump:
  RF dump       R0     R1     R2     R3     R4     R5     R6     R7     R8     R9
       SP0:   0000  0000  0020  0040  3f80  0000  0000  0000  4000  4000  4000  4000
       SP1:   0001  0008  0028  0048  0000  3f80  0000  0000  4000  4000  4000  4000
       SP2:   0002  0010  0030  0050  0000  0000  3f80  0000  4000  4000  4000  4000
       SP3:   0003  0018  0038  0058  0000  0000  0000  3f80  4000  4000  4000  4000
[PASS] T369: K30 D[i][0]=2.0  SP0.R12 = 0x4000
[PASS] T370: K30 D[i][0]=2.0  SP1.R12 = 0x4000
[PASS] T371: K30 D[i][0]=2.0  SP2.R12 = 0x4000
[PASS] T372: K30 D[i][0]=2.0  SP3.R12 = 0x4000
[PASS] T373: K30 D[i][1]=2.0  SP0.R13 = 0x4000
[PASS] T374: K30 D[i][1]=2.0  SP1.R13 = 0x4000
[PASS] T375: K30 D[i][1]=2.0  SP2.R13 = 0x4000
[PASS] T376: K30 D[i][1]=2.0  SP3.R13 = 0x4000
[PASS] T377: K30 D[i][2]=2.0  SP0.R14 = 0x4000
[PASS] T378: K30 D[i][2]=2.0  SP1.R14 = 0x4000
[PASS] T379: K30 D[i][2]=2.0  SP2.R14 = 0x4000
[PASS] T380: K30 D[i][2]=2.0  SP3.R14 = 0x4000
[PASS] T381: K30 D[i][3]=2.0  SP0.R15 = 0x4000
[PASS] T382: K30 D[i][3]=2.0  SP1.R15 = 0x4000
[PASS] T383: K30 D[i][3]=2.0  SP2.R15 = 0x4000
[PASS] T384: K30 D[i][3]=2.0  SP3.R15 = 0x4000
[PASS] T385: K30 SP0 D[0][0]=2.0  SP0.DMEM[64] = 0x4000
[PASS] T386: K30 SP0 D[0][1]=2.0  SP0.DMEM[65] = 0x4000
[PASS] T387: K30 SP0 D[0][2]=2.0  SP0.DMEM[66] = 0x4000
[PASS] T388: K30 SP0 D[0][3]=2.0  SP0.DMEM[67] = 0x4000
[PASS] T389: K30 SP1 D[1][0]=2.0  SP1.DMEM[72] = 0x4000
[PASS] T390: K30 SP1 D[1][1]=2.0  SP1.DMEM[73] = 0x4000
[PASS] T391: K30 SP1 D[1][2]=2.0  SP1.DMEM[74] = 0x4000
[PASS] T392: K30 SP1 D[1][3]=2.0  SP1.DMEM[75] = 0x4000
```

```
[PASS] T393: K30 SP2 D[2][0]=2.0  SP2.DMEM[80] = 0x4000
[PASS] T394: K30 SP2 D[2][1]=2.0  SP2.DMEM[81] = 0x4000
[PASS] T395: K30 SP2 D[2][2]=2.0  SP2.DMEM[82] = 0x4000
[PASS] T396: K30 SP2 D[2][3]=2.0  SP2.DMEM[83] = 0x4000
[PASS] T397: K30 SP3 D[3][0]=2.0  SP3.DMEM[88] = 0x4000
[PASS] T398: K30 SP3 D[3][1]=2.0  SP3.DMEM[89] = 0x4000
[PASS] T399: K30 SP3 D[3][2]=2.0  SP3.DMEM[90] = 0x4000
[PASS] T400: K30 SP3 D[3][3]=2.0  SP3.DMEM[91] = 0x4000

============================================
  SM Core Testbench — Summary
  PASSED: 400
  FAILED: 0
  TOTAL:  400
============================================
>>> ALL TESTS PASSED <<<
../tb/sm_core_tb.v:1558: $finish called at 13216000 (1ps)
```

```
sm_top_debug:
VCD info: dumpfile sm_top_tb.vcd opened for output.
============================================
  SM Top Testbench — 6 PTX Kernel Tests
============================================

--- K1: vec_add int16 ---
  [C000] PC=0 MOV      fv=0 | fstl=0 sb=0 exb=0 fl=0 | tc=IDLE     bu=IDLE     | done=
  [C001] PC=0 MOV      fv=0 | fstl=0 sb=0 exb=0 fl=0 | tc=IDLE     bu=IDLE     | done=
  [C002] PC=1 MOV      fv=1 | fstl=0 sb=0 exb=0 fl=0 | tc=IDLE     bu=IDLE     | done=
  [C003] PC=2 MOVI     fv=1 | fstl=0 sb=0 exb=0 fl=0 | tc=IDLE     bu=IDLE     | done=
  [C004] PC=3 MOVI     fv=1 | fstl=0 sb=0 exb=0 fl=0 | tc=IDLE     bu=IDLE     | done=
  [C005] PC=4 MOVI     fv=1 | fstl=0 sb=0 exb=0 fl=0 | tc=IDLE     bu=IDLE     | done=
  [C006] PC=5 SHL      fv=1 | fstl=0 sb=0 exb=0 fl=0 | tc=IDLE     bu=IDLE     | done=
  [C007] PC=6 ADD      fv=1 | fstl=1 sb=1 exb=0 fl=1 | tc=IDLE     bu=IDLE     | done=
  [C008] PC=6 ADD      fv=1 | fstl=1 sb=1 exb=0 fl=1 | tc=IDLE     bu=IDLE     | done=
  [C009] PC=6 ADD      fv=1 | fstl=0 sb=0 exb=0 fl=0 | tc=IDLE     bu=IDLE     | done=
  [C010] PC=7 LD       fv=1 | fstl=1 sb=1 exb=0 fl=1 | tc=IDLE     bu=IDLE     | done=
  [C011] PC=7 LD       fv=1 | fstl=1 sb=1 exb=0 fl=1 | tc=IDLE     bu=IDLE     | done=
  [C012] PC=7 LD       fv=1 | fstl=0 sb=0 exb=0 fl=0 | tc=IDLE     bu=IDLE     | done=
  [C013] PC=8 ADD      fv=1 | fstl=0 sb=0 exb=0 fl=0 | tc=IDLE     bu=IDLE     | done=
  [C014] PC=9 LD       fv=1 | fstl=1 sb=1 exb=0 fl=1 | tc=IDLE     bu=IDLE     | done=
  [C015] PC=9 LD       fv=1 | fstl=1 sb=1 exb=0 fl=1 | tc=IDLE     bu=IDLE     | done=
  [C016] PC=9 LD       fv=1 | fstl=0 sb=0 exb=0 fl=0 | tc=IDLE     bu=IDLE     | done=
  [C017] PC=10 ADD      fv=1 | fstl=1 sb=1 exb=0 fl=1 | tc=IDLE     bu=IDLE     | done
  [C018] PC=10 ADD      fv=1 | fstl=1 sb=1 exb=0 fl=1 | tc=IDLE     bu=IDLE     | done
  [C019] PC=10 ADD      fv=1 | fstl=0 sb=0 exb=0 fl=0 | tc=IDLE     bu=IDLE     | done
  [C020] PC=11 ADD      fv=1 | fstl=0 sb=0 exb=0 fl=0 | tc=IDLE     bu=IDLE     | done
  [C021] PC=12 ST       fv=1 | fstl=1 sb=1 exb=0 fl=1 | tc=IDLE     bu=IDLE     | done
  [C022] PC=12 ST       fv=1 | fstl=1 sb=1 exb=0 fl=1 | tc=IDLE     bu=IDLE     | done
  [C023] PC=12 ST       fv=1 | fstl=0 sb=0 exb=0 fl=0 | tc=IDLE     bu=IDLE     | done
  [C024] PC=13 RET      fv=1 | fstl=0 sb=0 exb=0 fl=0 | tc=IDLE     bu=IDLE     | done
  [C025] PC=13 NOP      fv=0 | fstl=0 sb=0 exb=0 fl=0 | tc=IDLE     bu=IDLE     | done
  [C026] PC=13 NOP      fv=0 | fstl=0 sb=0 exb=0 fl=0 | tc=IDLE     bu=IDLE     | done
  [C027] PC=13 NOP      fv=0 | fstl=0 sb=0 exb=0 fl=0 | tc=IDLE     bu=IDLE     | done
  [C028] PC=13 NOP      fv=0 | fstl=0 sb=0 exb=0 fl=0 | tc=IDLE     bu=IDLE     | done
```

```
[PASS] T1: K1 SP0 C[0]=10+5  SP0.DMEM[32] = 0x000f
[PASS] T2: K1 SP1 C[1]=20+15  SP1.DMEM[34] = 0x0023
[PASS] T3: K1 SP2 C[2]=30+25  SP2.DMEM[36] = 0x0037
[PASS] T4: K1 SP3 C[3]=40+35  SP3.DMEM[38] = 0x004b

--- K2: vec_sub int16 ---
[PASS] T5: K2 SP0 C[0]=100-30  SP0.DMEM[32] = 0x0046
[PASS] T6: K2 SP1 C[1]=200-50  SP1.DMEM[34] = 0x0096
[PASS] T7: K2 SP2 C[2]=300-100  SP2.DMEM[36] = 0x00c8
[PASS] T8: K2 SP3 C[3]=400-150  SP3.DMEM[38] = 0x00fa

--- K3: bf16_vector_mul ---
[PASS] T9: K3 MUL.f 2*3=6.0  SP0.R7 = 0x40c0
[PASS] T10: K3 MUL.f 2*3=6.0  SP1.R7 = 0x40c0
[PASS] T11: K3 MUL.f 2*3=6.0  SP2.R7 = 0x40c0
[PASS] T12: K3 MUL.f 2*3=6.0  SP3.R7 = 0x40c0
[PASS] T13: K3 SP0 C=6.0  SP0.DMEM[32] = 0x40c0
[PASS] T14: K3 SP1 C=6.0  SP1.DMEM[34] = 0x40c0
[PASS] T15: K3 SP2 C=6.0  SP2.DMEM[36] = 0x40c0
[PASS] T16: K3 SP3 C=6.0  SP3.DMEM[38] = 0x40c0

--- K4: bf16_fma ---
  [C000] PC=0 MOV      fv=0 | fstl=0 sb=0 exb=0 fl=0 | tc=IDLE     bu=IDLE     | done=
  [C001] PC=0 MOV      fv=0 | fstl=0 sb=0 exb=0 fl=0 | tc=IDLE     bu=IDLE     | done=
  [C002] PC=1 MOV      fv=1 | fstl=0 sb=0 exb=0 fl=0 | tc=IDLE     bu=IDLE     | done=
  [C003] PC=2 MOVI     fv=1 | fstl=0 sb=0 exb=0 fl=0 | tc=IDLE     bu=IDLE     | done=
  [C004] PC=3 MOVI     fv=1 | fstl=0 sb=0 exb=0 fl=0 | tc=IDLE     bu=IDLE     | done=
  [C005] PC=4 MOVI     fv=1 | fstl=0 sb=0 exb=0 fl=0 | tc=IDLE     bu=IDLE     | done=
  [C006] PC=5 MOVI     fv=1 | fstl=0 sb=0 exb=0 fl=0 | tc=IDLE     bu=IDLE     | done=
  [C007] PC=6 SHL      fv=1 | fstl=0 sb=0 exb=0 fl=0 | tc=IDLE     bu=IDLE     | done=
  [C008] PC=7 ADD      fv=1 | fstl=1 sb=1 exb=0 fl=1 | tc=IDLE     bu=IDLE     | done=
  [C009] PC=7 ADD      fv=1 | fstl=1 sb=1 exb=0 fl=1 | tc=IDLE     bu=IDLE     | done=
  [C010] PC=7 ADD      fv=1 | fstl=0 sb=0 exb=0 fl=0 | tc=IDLE     bu=IDLE     | done=
  [C011] PC=8 LD       fv=1 | fstl=1 sb=1 exb=0 fl=1 | tc=IDLE     bu=IDLE     | done=
  [C012] PC=8 LD       fv=1 | fstl=1 sb=1 exb=0 fl=1 | tc=IDLE     bu=IDLE     | done=
  [C013] PC=8 LD       fv=1 | fstl=0 sb=0 exb=0 fl=0 | tc=IDLE     bu=IDLE     | done=
  [C014] PC=9 ADD      fv=1 | fstl=0 sb=0 exb=0 fl=0 | tc=IDLE     bu=IDLE     | done=
  [C015] PC=10 LD       fv=1 | fstl=1 sb=1 exb=0 fl=1 | tc=IDLE     bu=IDLE     | done
  [C016] PC=10 LD       fv=1 | fstl=1 sb=1 exb=0 fl=1 | tc=IDLE     bu=IDLE     | done
  [C017] PC=10 LD       fv=1 | fstl=0 sb=0 exb=0 fl=0 | tc=IDLE     bu=IDLE     | done
  [C018] PC=11 ADD      fv=1 | fstl=0 sb=0 exb=0 fl=0 | tc=IDLE     bu=IDLE     | done
  [C019] PC=12 LD       fv=1 | fstl=1 sb=1 exb=0 fl=1 | tc=IDLE     bu=IDLE     | done
  [C020] PC=12 LD       fv=1 | fstl=1 sb=1 exb=0 fl=1 | tc=IDLE     bu=IDLE     | done
  [C021] PC=12 LD       fv=1 | fstl=0 sb=0 exb=0 fl=0 | tc=IDLE     bu=IDLE     | done
  [C022] PC=13 FMA      fv=1 | fstl=1 sb=1 exb=0 fl=1 | tc=IDLE     bu=IDLE     | done
  [C023] PC=13 FMA      fv=1 | fstl=1 sb=1 exb=0 fl=1 | tc=IDLE     bu=IDLE     | done
  [C024] PC=13 FMA      fv=1 | fstl=0 sb=0 exb=0 fl=0 | tc=IDLE     bu=IDLE     | done
  [C025] PC=14 ADD      fv=1 | fstl=1 sb=0 exb=1 fl=0 | tc=IDLE     bu=IDLE     | done
  [C026] PC=14 ADD      fv=1 | fstl=1 sb=0 exb=1 fl=0 | tc=IDLE     bu=IDLE     | done
  [C027] PC=14 ADD      fv=1 | fstl=1 sb=0 exb=1 fl=0 | tc=IDLE     bu=IDLE     | done
  [C028] PC=14 ADD      fv=1 | fstl=1 sb=0 exb=1 fl=0 | tc=IDLE     bu=IDLE     | done
  [C029] PC=14 ADD      fv=1 | fstl=1 sb=0 exb=1 fl=0 | tc=IDLE     bu=IDLE     | done
  [C030] PC=14 ADD      fv=1 | fstl=1 sb=0 exb=1 fl=0 | tc=IDLE     bu=IDLE     | done
  [C031] PC=14 ADD      fv=1 | fstl=1 sb=0 exb=1 fl=0 | tc=IDLE     bu=IDLE     | done
  [C032] PC=14 ADD      fv=1 | fstl=1 sb=0 exb=1 fl=0 | tc=IDLE     bu=IDLE     | done
```

```
  [C033] PC=14 ADD      fv=1 | fstl=0 sb=0 exb=0 fl=0 | tc=IDLE     bu=IDLE     | done
  [C034] PC=15 ST       fv=1 | fstl=1 sb=1 exb=0 fl=1 | tc=IDLE     bu=IDLE     | done
  [C035] PC=15 ST       fv=1 | fstl=1 sb=1 exb=0 fl=1 | tc=IDLE     bu=IDLE     | done
  [C036] PC=15 ST       fv=1 | fstl=0 sb=0 exb=0 fl=0 | tc=IDLE     bu=IDLE     | done
  [C037] PC=16 RET      fv=1 | fstl=0 sb=0 exb=0 fl=0 | tc=IDLE     bu=IDLE     | done
  [C038] PC=16 NOP      fv=0 | fstl=0 sb=0 exb=0 fl=0 | tc=IDLE     bu=IDLE     | done
  [C039] PC=16 NOP      fv=0 | fstl=0 sb=0 exb=0 fl=0 | tc=IDLE     bu=IDLE     | done
  [C040] PC=16 NOP      fv=0 | fstl=0 sb=0 exb=0 fl=0 | tc=IDLE     bu=IDLE     | done
  [C041] PC=16 NOP      fv=0 | fstl=0 sb=0 exb=0 fl=0 | tc=IDLE     bu=IDLE     | done
[PASS] T17: K4 FMA.f 2*3+1=7.0  SP0.R7 = 0x40e0
[PASS] T18: K4 FMA.f 2*3+1=7.0  SP1.R7 = 0x40e0
[PASS] T19: K4 FMA.f 2*3+1=7.0  SP2.R7 = 0x40e0
[PASS] T20: K4 FMA.f 2*3+1=7.0  SP3.R7 = 0x40e0
[PASS] T21: K4 SP0 D=7.0  SP0.DMEM[48] = 0x40e0
[PASS] T22: K4 SP1 D=7.0  SP1.DMEM[50] = 0x40e0
[PASS] T23: K4 SP2 D=7.0  SP2.DMEM[52] = 0x40e0
[PASS] T24: K4 SP3 D=7.0  SP3.DMEM[54] = 0x40e0

--- K5: relu bf16 ---
  [C000] PC=0 MOV      fv=0 | fstl=0 sb=0 exb=0 fl=0 | tc=IDLE     bu=IDLE     | done=
  [C001] PC=0 MOV      fv=0 | fstl=0 sb=0 exb=0 fl=0 | tc=IDLE     bu=IDLE     | done=
  [C002] PC=1 MOV      fv=1 | fstl=0 sb=0 exb=0 fl=0 | tc=IDLE     bu=IDLE     | done=
  [C003] PC=2 MOVI     fv=1 | fstl=0 sb=0 exb=0 fl=0 | tc=IDLE     bu=IDLE     | done=
  [C004] PC=3 MOVI     fv=1 | fstl=0 sb=0 exb=0 fl=0 | tc=IDLE     bu=IDLE     | done=
  [C005] PC=4 SHL      fv=1 | fstl=0 sb=0 exb=0 fl=0 | tc=IDLE     bu=IDLE     | done=
  [C006] PC=5 ADD      fv=1 | fstl=1 sb=1 exb=0 fl=1 | tc=IDLE     bu=IDLE     | done=
  [C007] PC=5 ADD      fv=1 | fstl=1 sb=1 exb=0 fl=1 | tc=IDLE     bu=IDLE     | done=
  [C008] PC=5 ADD      fv=1 | fstl=0 sb=0 exb=0 fl=0 | tc=IDLE     bu=IDLE     | done=
  [C009] PC=6 LD       fv=1 | fstl=1 sb=1 exb=0 fl=1 | tc=IDLE     bu=IDLE     | done=
  [C010] PC=6 LD       fv=1 | fstl=1 sb=1 exb=0 fl=1 | tc=IDLE     bu=IDLE     | done=
  [C011] PC=6 LD       fv=1 | fstl=0 sb=0 exb=0 fl=0 | tc=IDLE     bu=IDLE     | done=
  [C012] PC=7 MOVI     fv=1 | fstl=0 sb=0 exb=0 fl=0 | tc=IDLE     bu=IDLE     | done=
  [C013] PC=8 MAX      fv=1 | fstl=1 sb=1 exb=0 fl=1 | tc=IDLE     bu=IDLE     | done=
  [C014] PC=8 MAX      fv=1 | fstl=1 sb=1 exb=0 fl=1 | tc=IDLE     bu=IDLE     | done=
  [C015] PC=8 MAX      fv=1 | fstl=0 sb=0 exb=0 fl=0 | tc=IDLE     bu=IDLE     | done=
  [C016] PC=9 ADD      fv=1 | fstl=0 sb=0 exb=0 fl=0 | tc=IDLE     bu=IDLE     | done=
  [C017] PC=10 ST       fv=1 | fstl=1 sb=1 exb=0 fl=1 | tc=IDLE     bu=IDLE     | done
  [C018] PC=10 ST       fv=1 | fstl=1 sb=1 exb=0 fl=1 | tc=IDLE     bu=IDLE     | done
  [C019] PC=10 ST       fv=1 | fstl=0 sb=0 exb=0 fl=0 | tc=IDLE     bu=IDLE     | done
  [C020] PC=11 RET      fv=1 | fstl=0 sb=0 exb=0 fl=0 | tc=IDLE     bu=IDLE     | done
  [C021] PC=11 NOP      fv=0 | fstl=0 sb=0 exb=0 fl=0 | tc=IDLE     bu=IDLE     | done
  [C022] PC=11 NOP      fv=0 | fstl=0 sb=0 exb=0 fl=0 | tc=IDLE     bu=IDLE     | done
  [C023] PC=11 NOP      fv=0 | fstl=0 sb=0 exb=0 fl=0 | tc=IDLE     bu=IDLE     | done
  [C024] PC=11 NOP      fv=0 | fstl=0 sb=0 exb=0 fl=0 | tc=IDLE     bu=IDLE     | done
[PASS] T25: K5 SP0 relu(-1)=0  SP0.R6 = 0x0000
[PASS] T26: K5 SP1 relu(2)=2.0  SP1.R6 = 0x4000
[PASS] T27: K5 SP2 relu(-3)=0  SP2.R6 = 0x0000
[PASS] T28: K5 SP3 relu(5)=5.0  SP3.R6 = 0x40a0
[PASS] T29: K5 SP0 out=0.0  SP0.DMEM[16] = 0x0000
[PASS] T30: K5 SP1 out=2.0  SP1.DMEM[18] = 0x4000
[PASS] T31: K5 SP2 out=0.0  SP2.DMEM[20] = 0x0000
[PASS] T32: K5 SP3 out=5.0  SP3.DMEM[22] = 0x40a0

--- K6: wmma_bf16 4x4 matmul ---
  D = I(4x4) * 2*ones(4x4) + 0 = 2*ones
```

```
[C000] PC=0 MOV      fv=0 | fstl=0 sb=0 exb=0 fl=0 | tc=IDLE     bu=IDLE     | done=
[C001] PC=0 MOV      fv=0 | fstl=0 sb=0 exb=0 fl=0 | tc=IDLE     bu=IDLE     | done=
[C002] PC=1 MOV      fv=1 | fstl=0 sb=0 exb=0 fl=0 | tc=IDLE     bu=IDLE     | done=
[C003] PC=2 MOVI     fv=1 | fstl=0 sb=0 exb=0 fl=0 | tc=IDLE     bu=IDLE     | done=
[C004] PC=3 MOVI     fv=1 | fstl=0 sb=0 exb=0 fl=0 | tc=IDLE     bu=IDLE     | done=
[C005] PC=4 MOVI     fv=1 | fstl=0 sb=0 exb=0 fl=0 | tc=IDLE     bu=IDLE     | done=
[C006] PC=5 SHL      fv=1 | fstl=0 sb=0 exb=0 fl=0 | tc=IDLE     bu=IDLE     | done=
[C007] PC=6 ADD      fv=1 | fstl=1 sb=1 exb=0 fl=1 | tc=IDLE     bu=IDLE     | done=
[C008] PC=6 ADD      fv=1 | fstl=1 sb=1 exb=0 fl=1 | tc=IDLE     bu=IDLE     | done=
[C009] PC=6 ADD      fv=1 | fstl=0 sb=0 exb=0 fl=0 | tc=IDLE     bu=IDLE     | done=
[C010] PC=7 ADD      fv=1 | fstl=0 sb=0 exb=0 fl=0 | tc=IDLE     bu=IDLE     | done=
[C011] PC=8 ADD      fv=1 | fstl=0 sb=0 exb=0 fl=0 | tc=IDLE     bu=IDLE     | done=
[C012] PC=9 WMMA.LD  fv=1 | fstl=1 sb=0 exb=0 fl=0 | tc=IDLE     bu=IDLE     | done=
[C013] PC=9 WMMA.LD  fv=1 | fstl=1 sb=0 exb=0 fl=0 | tc=IDLE     bu=IDLE     | done=
[C014] PC=9 WMMA.LD  fv=1 | fstl=1 sb=0 exb=0 fl=0 | tc=IDLE     bu=IDLE     | done=
[C015] PC=9 WMMA.LD  fv=1 | fstl=0 sb=0 exb=0 fl=0 | tc=IDLE     bu=IDLE     | done=
[C016] PC=10 WMMA.LD  fv=1 | fstl=1 sb=0 exb=0 fl=0 | tc=IDLE     bu=LD_ADDR  | done
[C017] PC=10 WMMA.LD  fv=1 | fstl=1 sb=0 exb=0 fl=0 | tc=IDLE     bu=LD_BEAT  | done
[C018] PC=10 WMMA.LD  fv=1 | fstl=1 sb=0 exb=0 fl=0 | tc=IDLE     bu=LD_BEAT  | done
[C019] PC=10 WMMA.LD  fv=1 | fstl=1 sb=0 exb=0 fl=0 | tc=IDLE     bu=LD_BEAT  | done
[C020] PC=10 WMMA.LD  fv=1 | fstl=1 sb=0 exb=0 fl=0 | tc=IDLE     bu=LD_BEAT  | done
[C021] PC=10 WMMA.LD  fv=1 | fstl=0 sb=0 exb=0 fl=0 | tc=IDLE     bu=IDLE     | done
[C022] PC=11 MOVI     fv=1 | fstl=1 sb=0 exb=0 fl=0 | tc=IDLE     bu=LD_ADDR  | done
[C023] PC=11 MOVI     fv=1 | fstl=1 sb=0 exb=0 fl=0 | tc=IDLE     bu=LD_BEAT  | done
[C024] PC=11 MOVI     fv=1 | fstl=1 sb=0 exb=0 fl=0 | tc=IDLE     bu=LD_BEAT  | done
[C025] PC=11 MOVI     fv=1 | fstl=1 sb=0 exb=0 fl=0 | tc=IDLE     bu=LD_BEAT  | done
[C026] PC=11 MOVI     fv=1 | fstl=1 sb=0 exb=0 fl=0 | tc=IDLE     bu=LD_BEAT  | done
[C027] PC=11 MOVI     fv=1 | fstl=0 sb=0 exb=0 fl=0 | tc=IDLE     bu=IDLE     | done
[C028] PC=12 MOVI     fv=1 | fstl=0 sb=0 exb=0 fl=0 | tc=IDLE     bu=IDLE     | done
[C029] PC=13 MOVI     fv=1 | fstl=0 sb=0 exb=0 fl=0 | tc=IDLE     bu=IDLE     | done
[C030] PC=14 MOVI     fv=1 | fstl=0 sb=0 exb=0 fl=0 | tc=IDLE     bu=IDLE     | done
[C031] PC=15 WMMA.MMA fv=1 | fstl=1 sb=0 exb=0 fl=0 | tc=IDLE     bu=IDLE     | done
[C032] PC=15 WMMA.MMA fv=1 | fstl=1 sb=0 exb=0 fl=0 | tc=IDLE     bu=IDLE     | done
[C033] PC=15 WMMA.MMA fv=1 | fstl=1 sb=0 exb=0 fl=0 | tc=IDLE     bu=IDLE     | done
[C034] PC=15 WMMA.MMA fv=1 | fstl=0 sb=0 exb=0 fl=0 | tc=IDLE     bu=IDLE     | done
[C035] PC=16 WMMA.ST  fv=1 | fstl=1 sb=0 exb=0 fl=0 | tc=GATH_A   bu=IDLE     | done
[C036] PC=16 WMMA.ST  fv=1 | fstl=1 sb=0 exb=0 fl=0 | tc=GATH_B   bu=IDLE     | done
[C037] PC=16 WMMA.ST  fv=1 | fstl=1 sb=0 exb=0 fl=0 | tc=GATH_C   bu=IDLE     | done
[C038] PC=16 WMMA.ST  fv=1 | fstl=1 sb=0 exb=0 fl=0 | tc=COMPUTE  bu=IDLE     | done
[C039] PC=16 WMMA.ST  fv=1 | fstl=1 sb=0 exb=0 fl=0 | tc=COMPUTE  bu=IDLE     | done
[C040] PC=16 WMMA.ST  fv=1 | fstl=1 sb=0 exb=0 fl=0 | tc=COMPUTE  bu=IDLE     | done
[C041] PC=16 WMMA.ST  fv=1 | fstl=1 sb=0 exb=0 fl=0 | tc=COMPUTE  bu=IDLE     | done
[C042] PC=16 WMMA.ST  fv=1 | fstl=1 sb=0 exb=0 fl=0 | tc=COMPUTE  bu=IDLE     | done
[C043] PC=16 WMMA.ST  fv=1 | fstl=1 sb=0 exb=0 fl=0 | tc=COMPUTE  bu=IDLE     | done
[C044] PC=16 WMMA.ST  fv=1 | fstl=1 sb=0 exb=0 fl=0 | tc=COMPUTE  bu=IDLE     | done
[C045] PC=16 WMMA.ST  fv=1 | fstl=1 sb=0 exb=0 fl=0 | tc=COMPUTE  bu=IDLE     | done
[C046] PC=16 WMMA.ST  fv=1 | fstl=1 sb=0 exb=0 fl=0 | tc=COMPUTE  bu=IDLE     | done
[C047] PC=16 WMMA.ST  fv=1 | fstl=1 sb=0 exb=0 fl=0 | tc=COMPUTE  bu=IDLE     | done
[C048] PC=16 WMMA.ST  fv=1 | fstl=1 sb=0 exb=0 fl=0 | tc=COMPUTE  bu=IDLE     | done
[C049] PC=16 WMMA.ST  fv=1 | fstl=1 sb=0 exb=0 fl=0 | tc=COMPUTE  bu=IDLE     | done
[C050] PC=16 WMMA.ST  fv=1 | fstl=1 sb=0 exb=0 fl=0 | tc=COMPUTE  bu=IDLE     | done
[C051] PC=16 WMMA.ST  fv=1 | fstl=1 sb=0 exb=0 fl=0 | tc=COMPUTE  bu=IDLE     | done
[C052] PC=16 WMMA.ST  fv=1 | fstl=1 sb=0 exb=0 fl=0 | tc=COMPUTE  bu=IDLE     | done
[C053] PC=16 WMMA.ST  fv=1 | fstl=1 sb=0 exb=0 fl=0 | tc=COMPUTE  bu=IDLE     | done
[C054] PC=16 WMMA.ST  fv=1 | fstl=1 sb=0 exb=0 fl=0 | tc=COMPUTE  bu=IDLE     | done
```

```
  [C055] PC=16 WMMA.ST  fv=1 | fstl=1 sb=0 exb=0 fl=0 | tc=COMPUTE  bu=IDLE     | done
  [C056] PC=16 WMMA.ST  fv=1 | fstl=1 sb=0 exb=0 fl=0 | tc=COMPUTE  bu=IDLE     | done
  [C057] PC=16 WMMA.ST  fv=1 | fstl=1 sb=0 exb=0 fl=0 | tc=COMPUTE  bu=IDLE     | done
  [C058] PC=16 WMMA.ST  fv=1 | fstl=1 sb=0 exb=0 fl=0 | tc=COMPUTE  bu=IDLE     | done
  [C059] PC=16 WMMA.ST  fv=1 | fstl=1 sb=0 exb=0 fl=0 | tc=COMPUTE  bu=IDLE     | done
  [C060] PC=16 WMMA.ST  fv=1 | fstl=1 sb=0 exb=0 fl=0 | tc=COMPUTE  bu=IDLE     | done
  [C061] PC=16 WMMA.ST  fv=1 | fstl=1 sb=0 exb=0 fl=0 | tc=COMPUTE  bu=IDLE     | done
  [C062] PC=16 WMMA.ST  fv=1 | fstl=1 sb=0 exb=0 fl=0 | tc=COMPUTE  bu=IDLE     | done
  [C063] PC=16 WMMA.ST  fv=1 | fstl=1 sb=0 exb=0 fl=0 | tc=COMPUTE  bu=IDLE     | done
  [C064] PC=16 WMMA.ST  fv=1 | fstl=1 sb=0 exb=0 fl=0 | tc=COMPUTE  bu=IDLE     | done
  [C065] PC=16 WMMA.ST  fv=1 | fstl=1 sb=0 exb=0 fl=0 | tc=COMPUTE  bu=IDLE     | done
  [C066] PC=16 WMMA.ST  fv=1 | fstl=1 sb=0 exb=0 fl=0 | tc=COMPUTE  bu=IDLE     | done
  [C067] PC=16 WMMA.ST  fv=1 | fstl=1 sb=0 exb=0 fl=0 | tc=COMPUTE  bu=IDLE     | done
  [C068] PC=16 WMMA.ST  fv=1 | fstl=1 sb=0 exb=0 fl=0 | tc=COMPUTE  bu=IDLE     | done
  [C069] PC=16 WMMA.ST  fv=1 | fstl=1 sb=0 exb=0 fl=0 | tc=COMPUTE  bu=IDLE     | done
  [C070] PC=16 WMMA.ST  fv=1 | fstl=1 sb=0 exb=0 fl=0 | tc=COMPUTE  bu=IDLE     | done
  [C071] PC=16 WMMA.ST  fv=1 | fstl=1 sb=0 exb=0 fl=0 | tc=COMPUTE  bu=IDLE     | done
  [C072] PC=16 WMMA.ST  fv=1 | fstl=1 sb=0 exb=0 fl=0 | tc=COMPUTE  bu=IDLE     | done
  [C073] PC=16 WMMA.ST  fv=1 | fstl=1 sb=0 exb=0 fl=0 | tc=COMPUTE  bu=IDLE     | done
  [C074] PC=16 WMMA.ST  fv=1 | fstl=1 sb=0 exb=0 fl=0 | tc=COMPUTE  bu=IDLE     | done
  [C075] PC=16 WMMA.ST  fv=1 | fstl=1 sb=0 exb=0 fl=0 | tc=COMPUTE  bu=IDLE     | done
  [C076] PC=16 WMMA.ST  fv=1 | fstl=1 sb=0 exb=0 fl=0 | tc=SCAT_0   bu=IDLE     | done
  [C077] PC=16 WMMA.ST  fv=1 | fstl=1 sb=0 exb=0 fl=0 | tc=SCAT_1   bu=IDLE     | done
  [C078] PC=16 WMMA.ST  fv=1 | fstl=0 sb=0 exb=0 fl=0 | tc=IDLE     bu=IDLE     | done
  [C079] PC=17 RET      fv=1 | fstl=1 sb=0 exb=0 fl=0 | tc=IDLE     bu=ST_READ  | done
  [C080] PC=17 RET      fv=1 | fstl=1 sb=0 exb=0 fl=0 | tc=IDLE     bu=ST_BEAT  | done
  [C081] PC=17 RET      fv=1 | fstl=1 sb=0 exb=0 fl=0 | tc=IDLE     bu=ST_BEAT  | done
  [C082] PC=17 RET      fv=1 | fstl=1 sb=0 exb=0 fl=0 | tc=IDLE     bu=ST_BEAT  | done
  [C083] PC=17 RET      fv=1 | fstl=1 sb=0 exb=0 fl=0 | tc=IDLE     bu=ST_BEAT  | done
  [C084] PC=17 RET      fv=1 | fstl=0 sb=0 exb=0 fl=0 | tc=IDLE     bu=IDLE     | done
  [C085] PC=17 NOP      fv=0 | fstl=0 sb=0 exb=0 fl=0 | tc=IDLE     bu=IDLE     | done
  [C086] PC=17 NOP      fv=0 | fstl=0 sb=0 exb=0 fl=0 | tc=IDLE     bu=IDLE     | done
  [C087] PC=17 NOP      fv=0 | fstl=0 sb=0 exb=0 fl=0 | tc=IDLE     bu=IDLE     | done
  [C088] PC=17 NOP      fv=0 | fstl=0 sb=0 exb=0 fl=0 | tc=IDLE     bu=IDLE     | done
[PASS] T33: K6 D[i][0]=2.0  SP0.R12 = 0x4000
[PASS] T34: K6 D[i][0]=2.0  SP1.R12 = 0x4000
[PASS] T35: K6 D[i][0]=2.0  SP2.R12 = 0x4000
[PASS] T36: K6 D[i][0]=2.0  SP3.R12 = 0x4000
[PASS] T37: K6 D[i][1]=2.0  SP0.R13 = 0x4000
[PASS] T38: K6 D[i][1]=2.0  SP1.R13 = 0x4000
[PASS] T39: K6 D[i][1]=2.0  SP2.R13 = 0x4000
[PASS] T40: K6 D[i][1]=2.0  SP3.R13 = 0x4000
[PASS] T41: K6 D[i][2]=2.0  SP0.R14 = 0x4000
[PASS] T42: K6 D[i][2]=2.0  SP1.R14 = 0x4000
[PASS] T43: K6 D[i][2]=2.0  SP2.R14 = 0x4000
[PASS] T44: K6 D[i][2]=2.0  SP3.R14 = 0x4000
[PASS] T45: K6 D[i][3]=2.0  SP0.R15 = 0x4000
[PASS] T46: K6 D[i][3]=2.0  SP1.R15 = 0x4000
[PASS] T47: K6 D[i][3]=2.0  SP2.R15 = 0x4000
[PASS] T48: K6 D[i][3]=2.0  SP3.R15 = 0x4000
[PASS] T49: K6 SP0 D[0][0]=2.0  SP0.DMEM[64] = 0x4000
[PASS] T50: K6 SP0 D[0][1]=2.0  SP0.DMEM[65] = 0x4000
[PASS] T51: K6 SP0 D[0][2]=2.0  SP0.DMEM[66] = 0x4000
[PASS] T52: K6 SP0 D[0][3]=2.0  SP0.DMEM[67] = 0x4000
[PASS] T53: K6 SP1 D[1][0]=2.0  SP1.DMEM[72] = 0x4000
```

```
[PASS] T54: K6 SP1 D[1][1]=2.0  SP1.DMEM[73] = 0x4000
[PASS] T55: K6 SP1 D[1][2]=2.0  SP1.DMEM[74] = 0x4000
[PASS] T56: K6 SP1 D[1][3]=2.0  SP1.DMEM[75] = 0x4000
[PASS] T57: K6 SP2 D[2][0]=2.0  SP2.DMEM[80] = 0x4000
[PASS] T58: K6 SP2 D[2][1]=2.0  SP2.DMEM[81] = 0x4000
[PASS] T59: K6 SP2 D[2][2]=2.0  SP2.DMEM[82] = 0x4000
[PASS] T60: K6 SP2 D[2][3]=2.0  SP2.DMEM[83] = 0x4000
[PASS] T61: K6 SP3 D[3][0]=2.0  SP3.DMEM[88] = 0x4000
[PASS] T62: K6 SP3 D[3][1]=2.0  SP3.DMEM[89] = 0x4000
[PASS] T63: K6 SP3 D[3][2]=2.0  SP3.DMEM[90] = 0x4000
[PASS] T64: K6 SP3 D[3][3]=2.0  SP3.DMEM[91] = 0x4000

============================================
  SM Top Testbench — Summary
  PASSED: 64
  FAILED: 0
  TOTAL:  64
============================================
>>> ALL TESTS PASSED <<<
../tb/sm_top_tb.v:800: $finish called at 19156000 (1ps)
```